teCom
Technology Components

ergo
Components

CONVEYOR COMPONENTS

2020

Conveyor components

Part.	Pag.
200	10
201	10
202	11
203	11
204	49
205	49
206	56
207	13
208	12
209	25
210	15
211	13
212	12
213	17
214	17
215	18
216	20
217	25
218	21
219	24
220	26
221	34
222	34
223	35
224	28
225	28
226	36
227	36
228	36
229	43
230	43
231	44
232	44
233	86
234	86
235	29
236	29
237	57
238	58
239	59
240	57
241	59
242	26
243	18
244	21
245	73
246	37
247	37
248	37
249	73
250	70
251	71
252	72
253	72
254	75
255	24
256	35
257	88
258	89
259	89
260	91
261	92
262	92
263	82
264	83
265	83
266	34
267	63
268	77
269	77
270	66
271	66
272	69
273	67
274	68
275	69
276	74
277	64
278	64
279	20
280	19
281	19
282	75
283	85
285	76
286	67
287	68
288	87
289	43
290	48
291	44
293	74
294	40
296	71
297	60
299	137
300	82
301	48
302	70
303	41
304	41
305	41
306	94
307	94
308	95
310	77
311	76
312	60
313	38
314	38
315	38
316	136
317	82
318	108
319	95
320	106
321	106
322	106
323	106
324	58
325	98
326	98
327	99
328	99
329	107
330	121
331	138
332	42
333	61
334	39
335	84
336	84
337	39
338	39
339	115
340	112
341	112
342	113
343	113
344	116
345	114
346	46
347	46
348	47
349	47
350	40
352	139
353	125
354	123
355	102
356	102
357	103
358	103
359	63
360	135
361	142
362	142
363	142
364	142
365	143
366	143
367	143
368	143
369	143
370	141
371	141
372	141
373	123
374	140
375	121
376	87
377	128
379	65
380	65
381	129
382	40
383	40
384	129
385	129
386	39
387	30
388	120
389	130
390	131
391	131
392	30
393	120
394	120
395	120
397	42
398	49
399	73
400	42
401	16
402	14
403	16
404	16
405	52
406	33
407	33
408	31
409	14
410	51
411	51
412	50
413	50
414	85
415	109
416	91
417	88
418	124
419	124
420	125
421	116
422	115
423	114
424	52
425	122
426	122
427	55
428	62
429	136
430	90
431	90
432	93
433	93
434	55
435	61
436	30
437	108
438	127
439	54
440	53
441	32
442	32
443	53
444	130
446	127
448	117
449	118
450	119
451	117
452	118
453	119
454	78
455	78
456	79
457	79
458	81
459	81
460	48
461	132
462	140
463	107
464	104
465	105
466	105
467	100
468	96
469	126
470	54
471	134
472	80
473	80
474	96
475	97
476	97
477	100
478	101
479	101
480	104
481	109
482	105
483	45
484	45
485	126
486	27
487	27
488	22
489	22
490	23
491	23
492	132
493	110
494	111
495	133
496	133
497	133
498	134
499	134
500	120
511	108

Contents

Bases

Part. **200** pag. 10

Part. **201** pag. 10

Part. **202** pag. 11

Part. **203** pag. 11

Bearing heads

Part. **212** pag. 12

Part. **208** pag. 12

Part. **211** pag. 13

Part. **207** pag. 13

Part. **409** pag. 14

Part. **402** pag. 14

Connecting joints

Part. **210** pag. 15

Part. **210** pag. 15

Part. **403** pag. 16

Part. **404** pag. 16

Part. **401** pag. 16

Guide rail brackets

Part. **213** pag. 17

Part. **214** pag. 17

Part. **215** pag. 18

Part. **243** pag. 18

Part. **280** pag. 19

Part. **281** pag. 19

Part. **279** pag. 20

Part. **216** pag. 20

Part. **218** pag. 21

Part. **244** pag. 21

New

Part. **488** pag. 22

New

Part. **489** pag. 22

New

Part. **490** pag. 23

New

Part. **491** pag. 23

Part. **255** pag. 24

Part. **219** pag. 24

Part. **217** pag. 25

Part. **209** pag. 25

Part. **220** pag. 26

Part. **242** pag. 26

New

Part. **486** pag. 27

New

Part. **487** pag. 27

Part. **224** pag. 28

Part. **225** pag. 28

Part. **236** pag. 29

Part. **235** pag. 29

Part. **387** pag. 30

Part. **392** pag. 30

Part. **436** pag. 30

Part. **408** pag. 31

Part. **408** pag. 31

Part. **442** pag. 32

Part. **441** pag. 32

Tightening eyebolts

Part. 406 pag. 33
Part. 407 pag. 33

Heads for brackets

Part. 222 pag. 34
Part. 221 pag. 34
Part. 266 pag. 34
Part. 223 pag. 35
Part. 256 pag. 35

Knobs and handles

Part. 226 pag. 36
Part. 227 pag. 36
Part. 228 pag. 36
Part. 246 pag. 37
Part. 247 pag. 37
Part. 248 pag. 37
Part. 313 pag. 38
Part. 314 pag. 38
Part. 315 pag. 38
Part. 386 pag. 39
Part. 334 pag. 39
Part. 337 pag. 39
Part. 338 pag. 39
Part. 382 pag. 40
Part. 383 pag. 40
Part. 350 pag. 40
Part. 294 pag. 40
Part. 303 pag. 41
Part. 304 pag. 41
Part. 305 pag. 41
Part. 397 pag. 42
New Part. 400 pag. 42
Part. 332 pag. 42

Guide rail clamps

Part. 230 pag. 43
Part. 289 pag. 43
Part. 229 pag. 43
Part. 231 pag. 44
Part. 232 pag. 44
Part. 291 pag. 44
New Part. 483 pag. 45
New Part. 484 pag. 45
Part. 346 pag. 46
Part. 347 pag. 46
Part. 348 pag. 47
Part. 349 pag. 47
Part. 290 pag. 48
New Part. 301 pag. 48
Part. 460 pag. 48
Part. 398 pag. 49
Part. 204 pag. 49
Part. 205 pag. 49
Part. 412 pag. 50
Part. 413 pag. 50
Part. 410 pag. 51
Part. 411 pag. 51
Part. 405 pag. 52
Part. 424 pag. 52
Part. 443 pag. 53
Part. 440 pag. 53
Part. 439 pag. 54
Part. 470 pag. 54
Part. 427 pag. 55
Part. 434 pag. 55

Clamps

Part. **206** pag. 56

Part. **237** pag. 57

Part. **240** pag. 57

Part. **238** pag. 58

Part. **324** pag. 58

Part. **239** pag. 59

Part. **241** pag. 59

Part. **297** pag. 60

Part. **312** pag. 60

New

Part. **435** pag. 61

Part. **333** pag. 61

Shoes

Part. **428** pag. 62

Part. **267** pag. 63

Part. **359** pag. 63

Chain tensioners

Part. **277** pag. 64

Part. **278** pag. 64

Return rollers

Part. **379** pag. 65

Part. **380** pag. 65

Part. **270** pag. 66

Part. **271** pag. 66

Part. **273** pag. 67

Part. **286** pag. 67

Part. **287** pag. 68

Part. **274** pag. 68

Part. **275** pag. 69

New

Part. **272** pag. 69

Part. **302** pag. 70

Part. **250** pag. 70

Part. **251** pag. 71

Part. **296** pag. 71

Part. **252** pag. 72

Part. **253** pag. 72

Part. **249** pag. 73

Part. **245** pag. 73

Part. **399** pag. 73

Part. **293** pag. 74

Part. **276** pag. 74

Part. **254** pag. 75

Part. **282** pag. 75

ergo Components

Idler wheels

Part. 311 pag. 76

Part. 285 pag. 76

Part. 310 pag. 77

Part. 268 pag. 77

Part. 269 pag. 77

Part. 455 pag. 78

Part. 454 pag. 78

Part. 457 pag. 79

Part. 456 pag. 79

New

Part. 472 pag. 80

New

Part. 473 pag. 80

Part. 458 pag. 81

Part. 459 pag. 81

Bearing supports

Part. 300 pag. 82

Part. 317 pag. 82

Part. 263 pag. 82

Part. 264 pag. 83

Part. 265 pag. 83

Bushings

Part. 336 pag. 84

Part. 335 pag. 84

Part. 283 pag. 85

Part. 414 pag. 85

Hinges

Part. 233 pag. 86

Part. 234 pag. 86

Split shaft collars

Part. 288 pag. 87

Part. 376 pag. 87

Modular transfer plates

Part. 257 pag. 88

Part. 417 pag. 88

Part. 258 pag. 89

Part. 259 pag. 89

Part. 430 pag. 90

Part. 431 pag. 90

Part. 260 pag. 91

Part. 416 pag. 91

Part. 261 pag. 92

Part. 262 pag. 92

Part. 432 pag. 93

Part. 433 pag. 93

Product guides and accessories

Part. 306 pag. 94	Part. 307 pag. 94	Part. 308 pag. 95	Part. 319 pag. 95	Part. 468 pag. 96
Part. 474 pag. 96	Part. 475 pag. 97	Part. 476 pag. 97	Part. 325 pag. 98	Part. 326 pag. 98
Part. 327 pag. 99	Part. 328 pag. 99	Part. 467 pag. 100	Part. 477 pag. 100	Part. 478 pag. 101
Part. 479 pag. 101	Part. 355 pag. 102	Part. 356 pag. 102	Part. 357 pag. 103	Part. 358 pag. 103
Part. 464 pag. 104	Part. 480 pag. 104	Part. 482 pag. 105	Part. 466 pag. 105	Part. 465 pag. 105
Part. 320 pag. 106	Part. 321 pag. 106	Part. 322 pag. 106	Part. 323 pag. 106	Part. 329 pag. 107
Part. 463 pag. 107	New Part. 511 pag. 108	Part. 318 pag. 108	Part. 437 pag. 108	Part. 415 pag. 109
Part. 481 pag. 109	New Part. 493 pag. 110	New Part. 494 pag. 111	Part. 340 pag. 112	Part. 341 pag. 112
Part. 342 pag. 113	Part. 343 pag. 113	Part. 345 pag. 114	Part. 423 pag. 114	Part. 339 pag. 115
Part. 422 pag. 115	Part. 344 pag. 116	Part. 421 pag. 116	Part. 448 pag. 117	Part. 451 pag. 117
Part. 449 pag. 118	Part. 452 pag. 118	Part. 450 pag. 119	Part. 453 pag. 119	Part. 388 pag. 120
Part. 393 pag. 120	Part. 394 pag. 120	Part. 395 pag. 120	New Part. 500 pag. 120	Part. 330 pag. 121
Part. 375 pag. 121	Part. 426 pag. 122	Part. 425 pag. 122	Part. 373 pag. 123	Part. 354 pag. 123
Part. 418 pag. 124	Part. 419 pag. 124	Part. 420 pag. 125	Part. 353 pag. 125	Part. 469 pag. 126
New Part. 485 pag. 126	Part. 370 pag. 141	Part. 371 pag. 141	Part. 372 pag. 141	

Chain guides and accessories

Part. **446** pag. 127

Part. **438** pag. 127

Part. **377** pag. 128

Part. **381** pag. 129

Part. **384** pag. 129

Part. **385** pag. 129

Part. **444** pag. 130

Part. **389** pag. 130

Part. **390** pag. 131

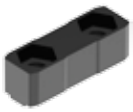
Part. **391** pag. 131

Part. **461** pag. 132

New

Part. **492** pag. 132

New

Part. **496** pag. 133

New

Part. **495** pag. 133

New

Part. **497** pag. 133

Part. **471** pag. 134

New

Part. **498** pag. 134

New

Part. **499** pag. 134

Part. **361** pag. 142

Part. **362** pag. 142

Part. **363** pag. 142

Part. **364** pag. 142

Part. **365** pag. 143

Part. **366** pag. 143

Part. **367** pag. 143

Part. **368** pag. 143

Part. **369** pag. 143

Accessories for the cross adjustment of the side guides

Part. **429** pag. 136

Part. **316** pag. 136

Part. **299** pag. 137

Part. **331** pag. 138

Part. **352** pag. 139

Part. **462** pag. 140

Part. **374** pag. 140

Process control

Part. **360** pag. 135

Bases

Part. 200 Support base
(tripod)

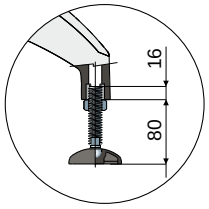

Max protrusion advised

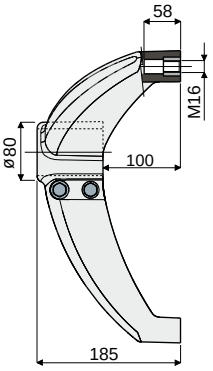

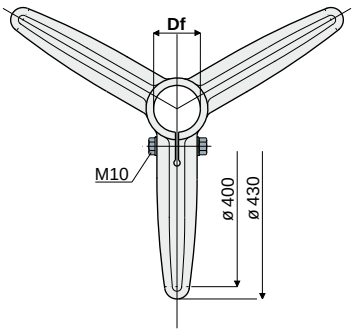

Df Bore for tubes of		Zinc plated bolts and nuts	Stainless steel AISI 304 bolts and nuts	Tube unthreading load	Max static load allowed
(mm)	(Inches)	Code	Code	(N)	(N)
60,3	2"	200 / 80588	200 / 80589	9600	15800
50,8	-	200 / 82070	200 / 82071		
48,3	1"1/2	200 / 80590	200 / 80591		
42,4	1"1/4	200 / 80592	200 / 80593		
40x40	square tube	200 / 85108	200 / 85109		
45x45	square tube	200 / 80271	200 / 80753		

MATERIALS: Base made of reinforced polyamide black colour; threaded bushing made of nickel plated brass; fixing bolts and nuts made of stainless steel AISI 304 or zinc plated steel.
FEATURES: Max tightening torque 3,6 Kg·m.
BOX QUANTITY: 8 pieces.
ON REQUEST:

- **Bases:** In reinforced polypropylene, other colours.
- **Box quantity:** According to your request.
- **Assembling of:** Bolts and nuts.

Part. 201 Support base
(bipod at 120°)

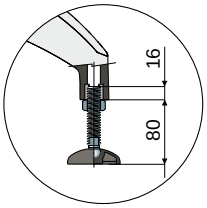

Max protrusion advised

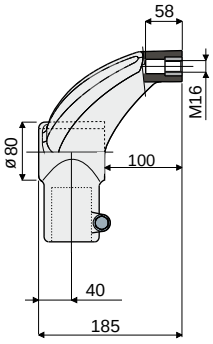

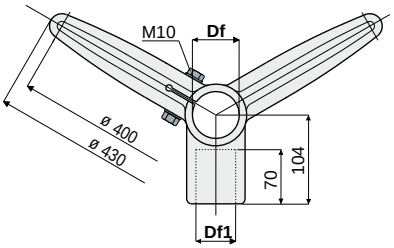

Df Bore for tubes of		Df1 Bore for tubes of		Zinc plated bolts and nuts	Stainless steel AISI 304 bolts and nuts	Tube unthreading load	Max static load allowed
(mm)	(Inches)	(mm)	(Inches)	Code	Code	(N)	(N)
60,3	2"	48,3	1"1/2	201 / 80612	201 / 80613	9600	15800
60,3	2"	42,4	1"1/4	201 / 80614	201 / 80615		
50,8	-	48,3	-	201 / 83200	201 / 83201		
50,8	-	42,4	-	201 / 83202	201 / 83203		
48,3	1"1/2	48,3	1"1/2	201 / 80616	201 / 80617		
48,3	1"1/2	42,4	1"1/4	201 / 80618	201 / 80619		
42,4	1"1/4	42,4	1"1/4	201 / 80620	201 / 80621		

MATERIALS: Base made of reinforced polyamide black colour; threaded bushing made of nickel plated brass; fixing bolts and nuts made of stainless steel AISI 304 or zinc plated steel.
FEATURES: Max tightening torque 3,6 Kg·m.
BOX QUANTITY: 8 pieces.
ON REQUEST:

- **Bases:** In reinforced polypropylene, other colours.
- **Box quantity:** According to your request.
- **Assembling of:** Bolts and nuts.

Bases

Support base (bipod at 180°) Part. 202

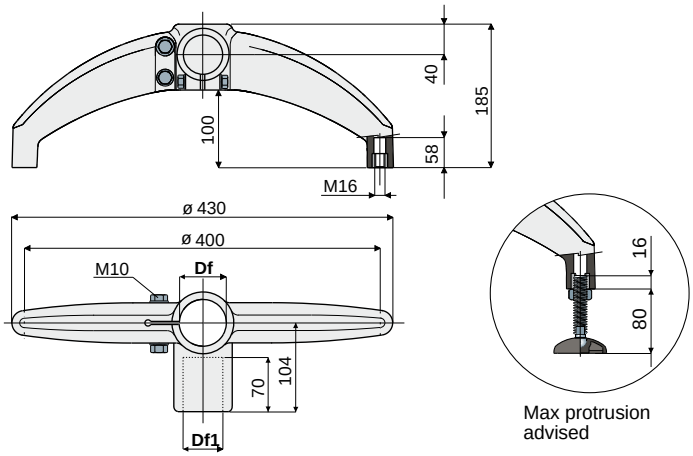

Df Bore for tubes of (mm)	(Inches)	Df1 Bore for tubes of (mm)	(Inches)	Zinc plated bolts and nuts Code	Stainless steel AISI 304 bolts and nuts Code	Tube unthreading load (N)	Max static load allowed (N)
60,3	2"	48,3	1"1/2	202 / 80622	202 / 80623	9600	15800
60,3	2"	42,4	1"1/4	202 / 80624	202 / 80625		
50,8	-	48,3	-	202 / 83204	202 / 83205		
50,8	-	42,4	-	202 / 83206	202 / 83207		
48,3	1"1/2	48,3	1"1/2	202 / 80626	202 / 80627		
48,3	1"1/2	42,4	1"1/4	202 / 80628	202 / 80629		
42,4	1"1/4	42,4	1"1/4	202 / 80630	202 / 80631		

MATERIALS: Base made of reinforced polyamide black colour; threaded bushing made of nickel plated brass; fixing bolts and nuts made of stainless steel AISI 304 or zinc plated steel.
FEATURES: Max tightening torque 3,6 Kg·m.
BOX QUANTITY: 8 pieces.
ON REQUEST:

- **Bases:** In reinforced polypropylene, other colours.
- **Box quantity:** According to your request.
- **Assembling of:** Bolts and nuts.

Support base (bipod at 180°) Part. 203

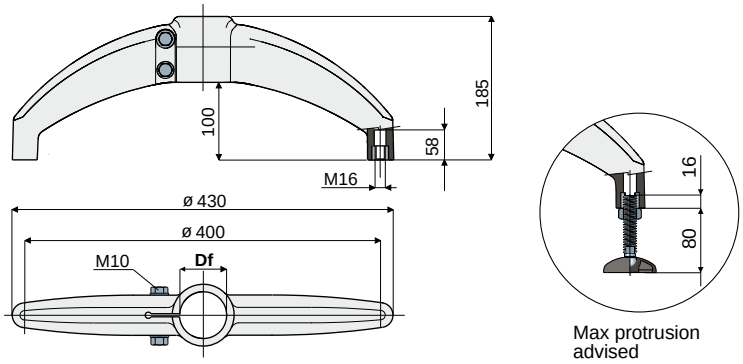

Df Bore for tubes of (mm)	(Inches)	Zinc plated bolts and nuts Code	Stainless steel AISI 304 bolts and nuts Code	Tube unthreading load (N)	Max static load allowed (N)
60,3	2"	203 / 80632	203 / 80633	9600	15800
50,8	-	203 / 82998	203 / 82999		
48,3	1"1/2	203 / 80634	203 / 80635		
42,4	1"1/4	203 / 80636	203 / 80637		

MATERIALS: Base made of reinforced polyamide black colour; threaded bushing made of nickel plated brass; fixing bolts and nuts made of stainless steel AISI 304 or zinc plated steel.
FEATURES: Max tightening torque 3,6 Kg·m.
BOX QUANTITY: 8 pieces.
ON REQUEST:

- **Bases:** In reinforced polypropylene, other colours.
- **Box quantity:** According to your request.
- **Assembling of:** Bolts and nuts.

Bearing heads

Part. 212 Bearing head

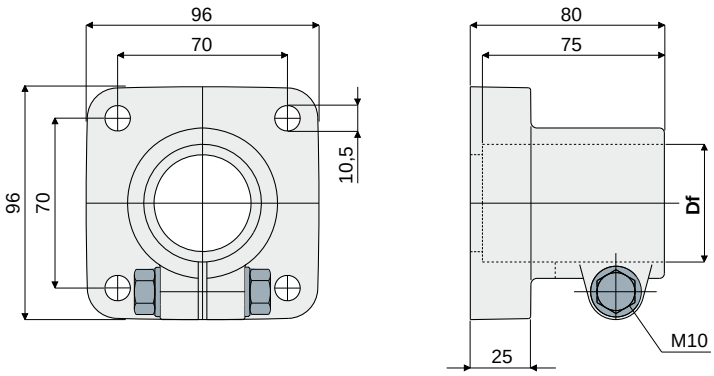

Df Bore for tubes of		Zinc plated bolts and nuts	Stainless steel AISI 304 bolts and nuts
(mm)	(Inches)	Code	Code
48,3	1"1/2	**212 / 80650**	**212 / 80651**
50,8	-	**212 / 83208**	**212 / 83110**

MATERIALS: Bearing head made of reinforced polyamide black colour; bolts and nuts made of stainless steel AISI 304 or zinc plated steel.
FEATURES: Max tightening torque 3,6 Kg·m.
BOX QUANTITY: 8 pieces.
ON REQUEST:

- **Bearing heads:** In reinforced polypropylene, other colours.
- **Box quantity:** According to your request.
- **Assembling of:** Bolts and nuts.

Part. 208 Bearing head

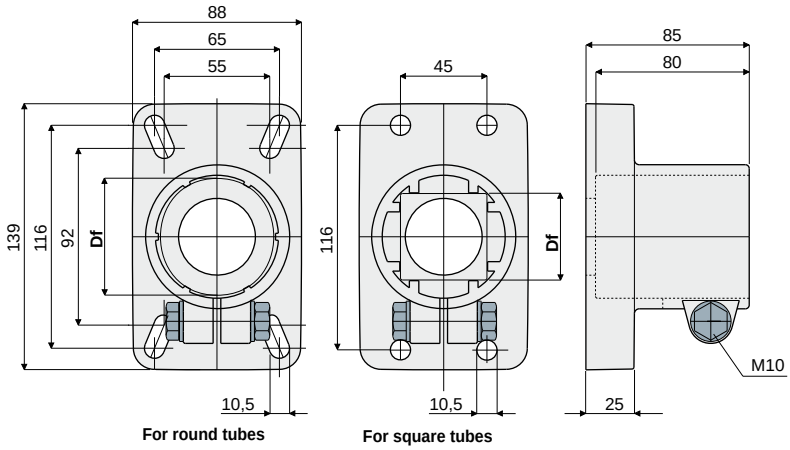

Df Bore for tubes of		Zinc plated bolts and nuts	Stainless steel AISI 304 bolts and nuts
(mm)	(Inches)	Code	Code
60,3	2"	**208 / 80764**	**208 / 80765**
50,8	-	**208 / 82072**	**208 / 82073**
48,3	1"1/2	**208 / 80766**	**208 / 80767**
42,4	1"1/4	**208 / 80768**	**208 / 80769**
40x40	square tube	**208 / 85110**	**208 / 85111**
45x45	square tube	**208 / 80770**	**208 / 80771**

MATERIALS: Bearing head made of reinforced polyamide black colour; bolts and nuts made of stainless steel AISI 304 or zinc plated steel.
FEATURES: Max tightening torque 3,6 Kg·m.
BOX QUANTITY: 8 pieces.
ON REQUEST:

- **Bearing heads:** In reinforced polypropylene, other colours.
- **Box quantity:** According to your request.
- **Assembling of:** Bolts and nuts.

Bearing heads

Side mounting top bracket Part. 211

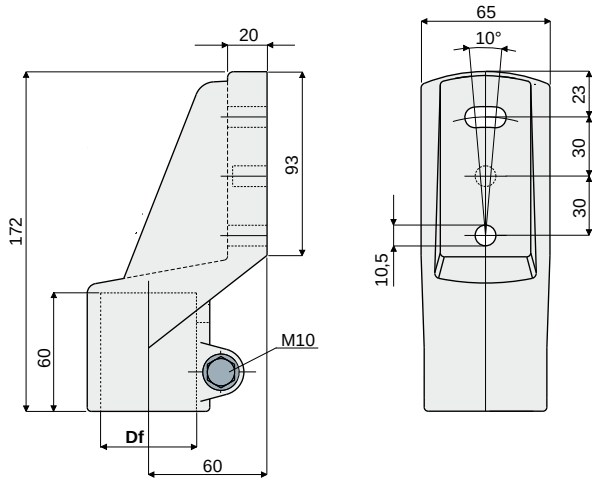

Df Bore for tubes of		Zinc plated bolts and nuts	Stainless steel AISI 304 bolts and nuts
(mm)	(Inches)	Code	Code
48,3	1"1/2	**211 / 80648**	**211 / 80649**

MATERIALS: Top bracket made out of reinforced polyamide black colour; bolts and nuts made out of stainless steel AISI 304 or zinc plated steel.
FEATURES: Max tightening torque 3,6 Kg·m.
BOX QUANTITY: 8 pieces.
ON REQUEST:

- **Top brackets:** In reinforced polypropylene, other colours.
- **Box quantity:** According to your request.
- **Assembling of:** Bolts and nuts.

Side mounting top bracket Part. 207

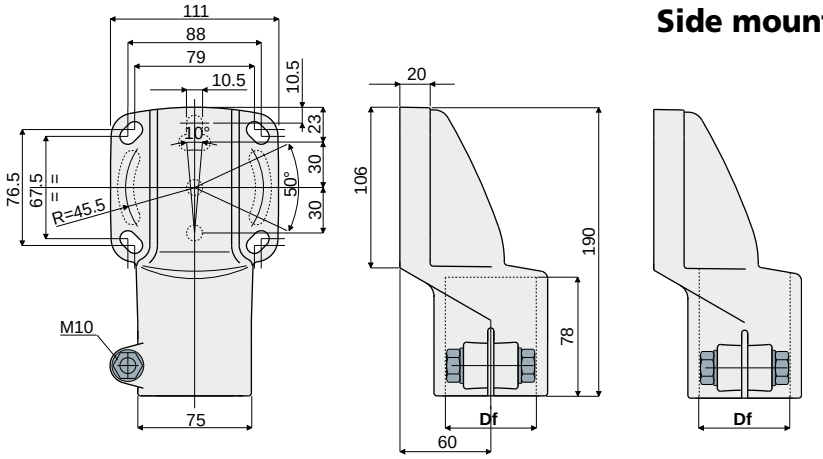

Df Bore for tubes of		Zinc plated bolts and nuts	Stainless steel AISI 304 bolts and nuts
(mm)	(Inches)	Code	Code
60,3	2"	**207 / 80790**	**207 / 80791**
50,8	-	**207 / 83210**	**207 / 83211**
48,3	1"1/2	**207 / 80792**	**207 / 80793**
42,4	1"1/4	**207 / 80794**	**207 / 80795**
40x40	square tube	**207 / 85112**	**207 / 85113**
45x45	square tube	**207 / 80796**	**207 / 80797**
48,3	through hole	**207 / 82632**	**207 / 82633**

MATERIALS: Top bracket made of reinforced polyamide black colour; bolts and nuts made of stainless steel AISI 304 or zinc plated steel.
FEATURES: Max tightening torque 3,6 Kg·m.
BOX QUANTITY: 8 pieces.
ON REQUEST:

- **Top brackets:** In reinforced polypropylene, other colours.
- **Box quantity:** According to your request.
- **Assembling of:** Bolts and nuts.

Bearing heads

Part. 409 Side mounting top bracket

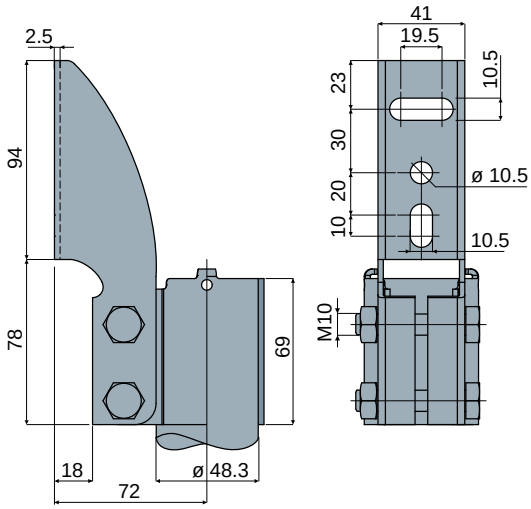

Example of application

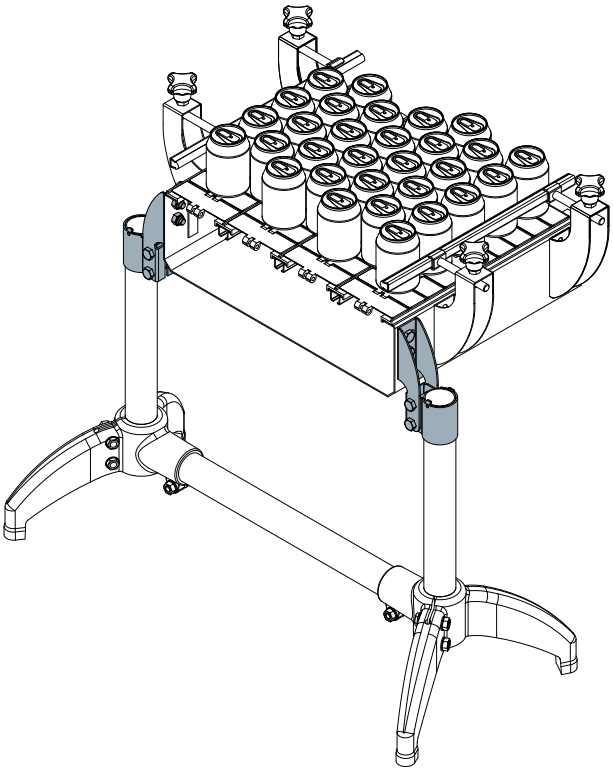

Code
409 / 84440

MATERIALS: Top bracket bolts and nuts made of stainless steel AISI 304.
FEATURES: Supplied complete with bolts and nuts.
BOX QUANTITY: 8 pieces.
ON REQUEST:
- Box quantity: According to your request.
- Assembly of: Bolts and nuts.

Part. 402 Bearing head

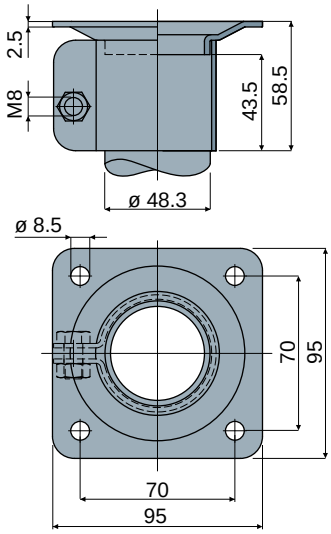

Example of application

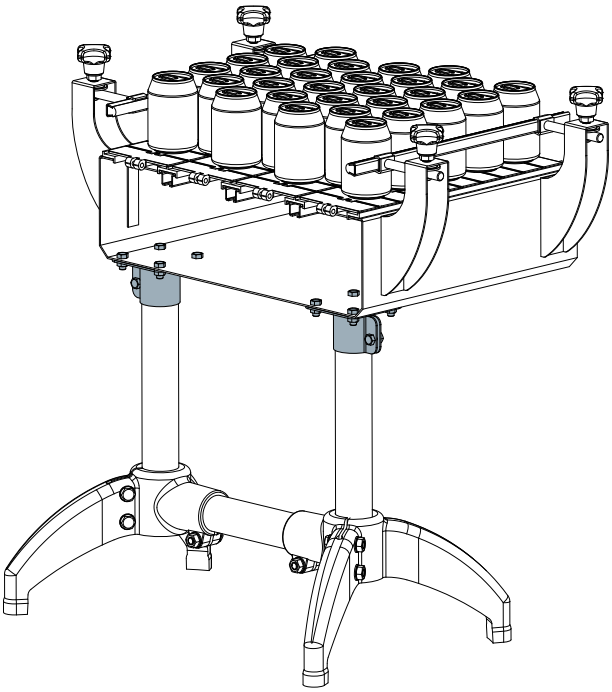

Code
402 / 84324

MATERIALS: Bearing head bolts and nuts made of stainless steel AISI 304.
FEATURES: Supplied complete with bolts and nuts.
BOX QUANTITY: 8 pieces.
ON REQUEST:
- Box quantity: According to your request.
- Assembly of: Bolts and nuts.

Connecting joints

Connection joint for round tubes

Part. **210**

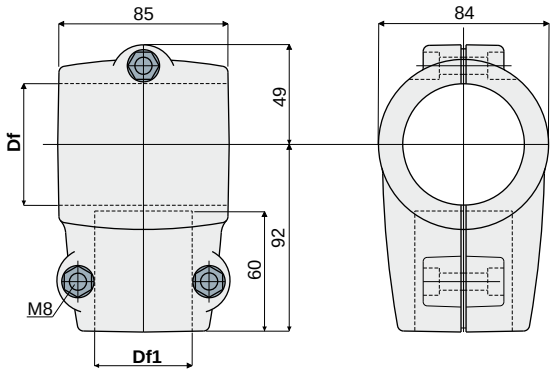

Df Bore for tubes of		Df1 Bore for tubes of		Zinc plated bolts and nuts	Stainless steel AISI 304 bolts and nuts
(mm)	(Inches)	(mm)	(Inches)	Code	Code
60,3	2"	48,3	1"1/2	**210 / 80638**	**210 / 80639**
60,3	2"	42,4	1"1/4	**210 / 80640**	**210 / 80641**
48,3	1"1/2	48,3	1"1/2	**210 / 80642**	**210 / 80643**
48,3	1"1/2	42,4	1"1/4	**210 / 80644**	**210 / 80645**
42,4	1"1/4	42,4	1"1/4	**210 / 80646**	**210 / 80647**

MATERIALS: Joint made of reinforced polyamide black colour; bolts and nuts made of stainless steel AISI 304 or zinc plated steel.
FEATURES: Max tightening torque 2 Kg·m.
BOX QUANTITY: 8 pieces.
ON REQUEST:

- **Joints:** In reinforced polypropylene, other colours.
- **Box quantity:** According to your request.
- **Assembling of:** Bolts and nuts.

Connection joint for square tubes

Part. **210**

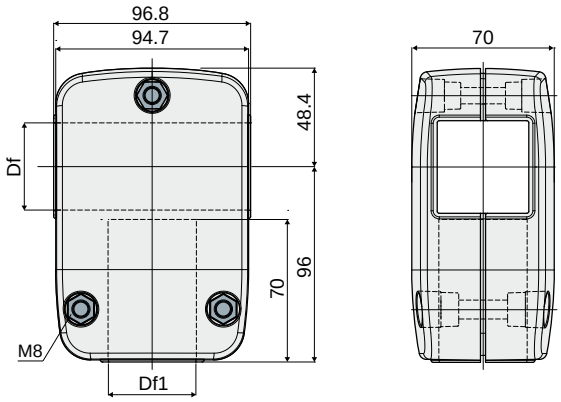

Df Bore for tubes of	Df1 Bore for tubes of	Zinc plated bolts and nuts	Stainless steel AISI 304 bolts and nuts
(mm)	(mm)	Code	Code
40x40	40x40	**210 / 85114**	**210 / 85115**
45x45	45x45	**210 / 84132**	**210 / 84133**

MATERIALS: Joint made of reinforced polyamide black colour; bolts and nuts made of stainless steel AISI 304 or zinc plated steel.
FEATURES: Max tightening torque 2 Kg·m.
BOX QUANTITY: 8 pieces.
ON REQUEST:

- **Joints:** In reinforced polypropylene, other colours.
- **Box quantity:** According to your request.
- **Assembling of:** Bolts and nuts.

Connecting joints

Part. 403 Connection joint

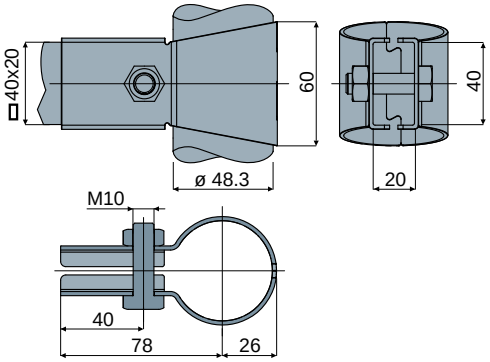

Example of application

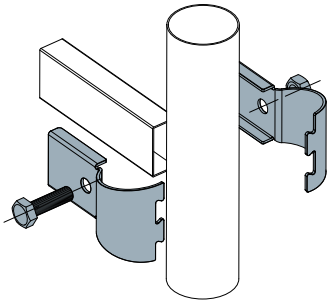

Code
403 / 84325

MATERIALS: Joint, screw and nut made of stainless steel AISI 304.
FEATURES: Supplied complete with bolts and nuts.
BOX QUANTITY: 8 pieces.
ON REQUEST:
- Box quantity: According to your request.
- Assembly of: Bolts and nuts.

Part. 404 Connection joint

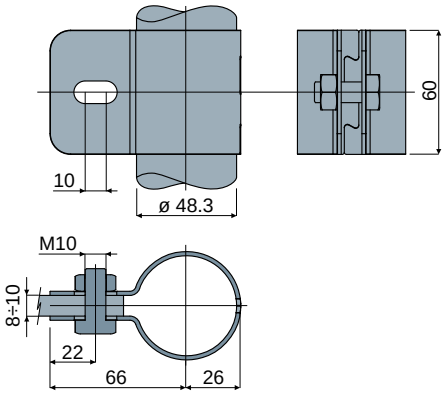

Example of application

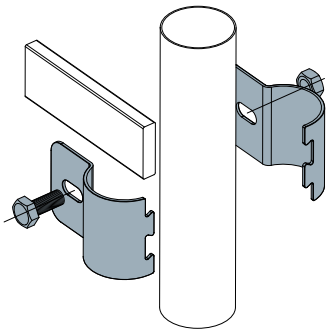

Code
404 / 84326

MATERIALS: Joint, screw and nut made of stainless steel AISI 304.
FEATURES: Supplied complete with bolts and nuts.
BOX QUANTITY: 8 pieces.
ON REQUEST:
- Box quantity: According to your request.
- Assembly of: Bolts and nuts.

Part. 401 Connection joint

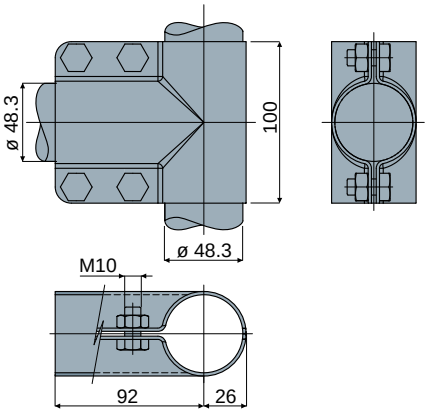

Example of application

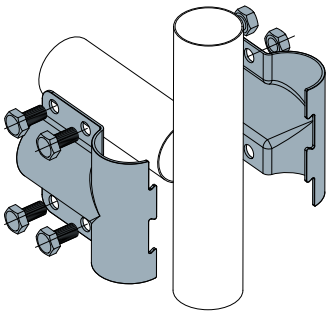

Code
401 / 84323

MATERIALS: Joint, screws and nuts made of stainless steel AISI 304.
FEATURES: Supplied complete with bolts and nuts.
BOX QUANTITY: 8 pieces.
ON REQUEST:
- Box quantity: According to your request.
- Assembly of: Bolts and nuts.

Guide rail brackets

Guide rail bracket Part. 213

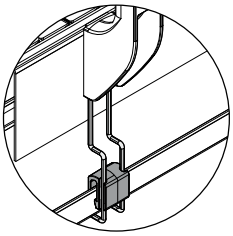

Presetting for
drip tray support
(see on page 29)

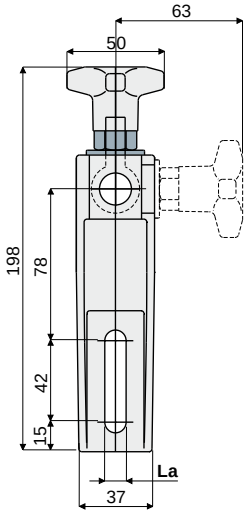

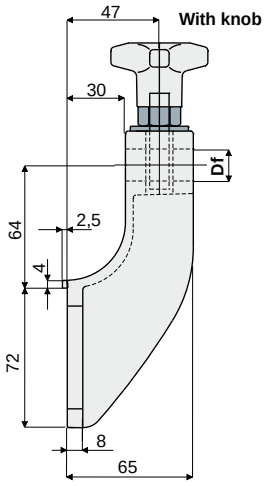

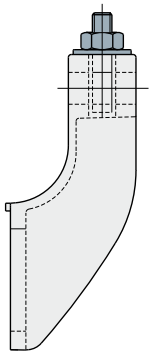

La (9 mm slot)		
Df Bore for pin of (mm)	With knob Code	With nut Code
12	213 / 81176	213 / 82105
14	213 / 82102	213 / 82107
16	213 / 82104	213 / 82109

La (11 mm slot)		
Df Bore for pin of (mm)	With knob Code	With nut Code
12	213 / 80652	213 / 80653
14	213 / 80654	213 / 80655
16	213 / 80656	213 / 80657

MATERIALS: Bracket and knob made of reinforced polyamide black colour; hexagonal insert made of nickel plated brass; eyebolt, nut and washer made of stainless steel AISI 304.
FEATURES: Max tightening torque 4 Kg·m.
BOX QUANTITY: 24 pieces.
ON REQUEST:

- **Brackets:** In reinforced polypropylene, other colours.
- **Box quantity:** According to your request.

Guide rail bracket (with adjustable head) Part. 214

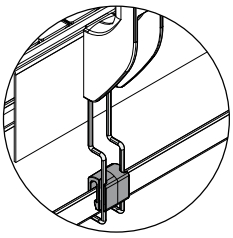

Presetting for
drip tray support
(see on page 29)

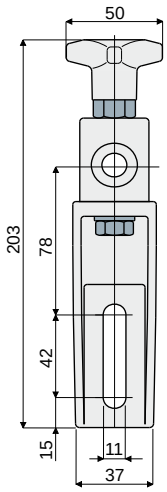

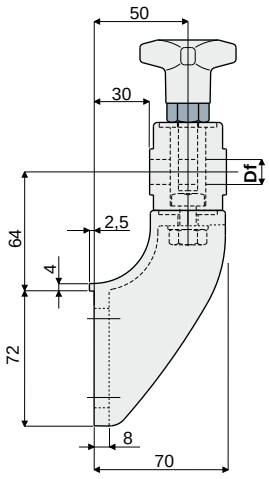

Df Bore for pin of (mm)	Code
12	214 / 80755
14	214 / 80756
16	214 / 80757

MATERIALS: Bracket and knob made of reinforced polyamide black colour; hexagonal insert made of nickel plated brass; eyebolt, screw, nut and washers made of stainless steel AISI 304.
FEATURES: Max tightening torque 4 Kg·m.
BOX QUANTITY: 24 pieces.
ON REQUEST:

- **Brackets:** In reinforced polypropylene, other colours.
- **Box quantity:** According to your request.

Guide rail brackets

Part. 215 Guide rail bracket
(with adjustable head)

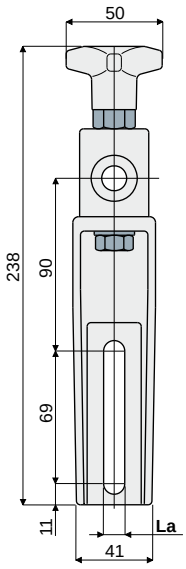

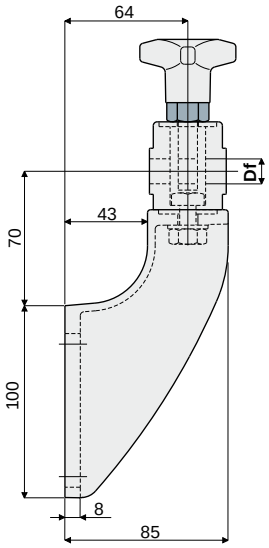

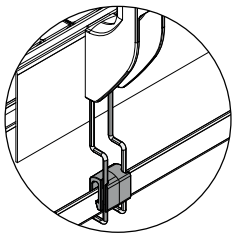

Presetting for
drip tray support
(see on page 29)

Df Bore for pin of (mm)	La (9 mm slot) Code	La (11 mm slot) Code
12	**215 / 82106**	**215 / 80658**
14	**215 / 82108**	**215 / 80659**
16	**215 / 82110**	**215 / 80660**

MATERIALS: Bracket and knob made of reinforced polyamide black colour; hexagonal insert made of nickel plated brass; eyebolt, screw, nut and washers made of stainless steel AISI 304.
FEATURES: Max tightening torque 4 Kg·m.
BOX QUANTITY: 24 pieces.
ON REQUEST:
- **Brackets:** In reinforced polypropylene, other colours.
- **Box quantity:** According to your request.

Part. 243 Guide rail bracket
(reinforced type with adjustable head)

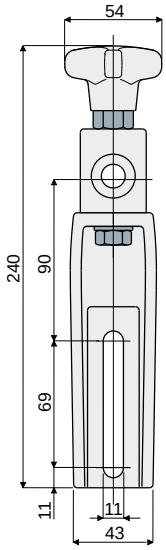

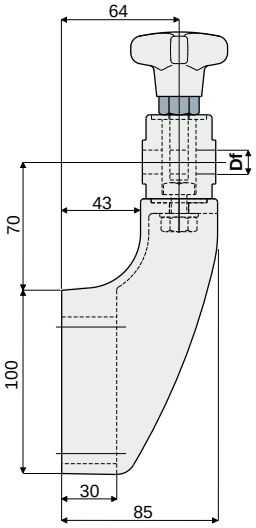

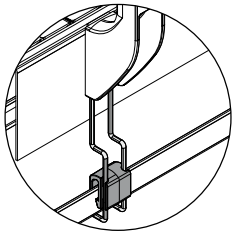

Presetting for
drip tray support
(see on page 29)

Df Bore for pin of (mm)	Code
12	**243 / 81003**
14	**243 / 81004**
16	**243 / 81005**

MATERIALS: Bracket and knob made of reinforced polyamide black colour; hexagonal insert made of nickel plated brass; eyebolt, screw, nut and washers made of stainless steel AISI 304.
FEATURES: To be used for heavy applications, suitable in conveyors with more ways, both in accumulation and curve.
Max tightening torque 4 Kg·m.
BOX QUANTITY: 24 pieces.
ON REQUEST:
- **Brackets:** In reinforced polypropylene, other colours.
- **Box quantity:** According to your request.

Guide rail brackets

Guide rail bracket
(with adjustable high type head)

Part. **280**

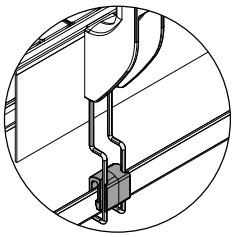

Presetting for
drip tray support
(see on page 29)

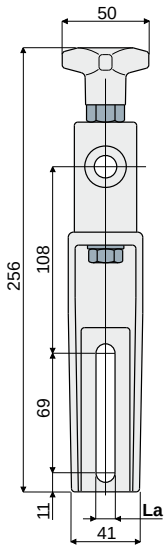

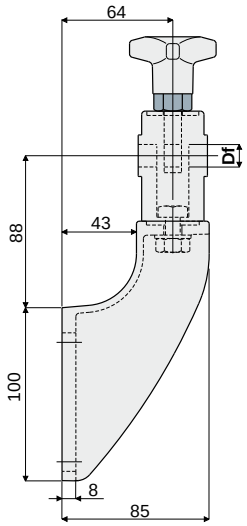

Df Bore for pin of (mm)	La (9 mm slot) Code	La (11 mm slot) Code
12	**280 / 82150**	**280 / 82127**
14	**280 / 82151**	**280 / 82128**
16	**280 / 82152**	**280 / 82129**

MATERIALS: Bracket and knob made of reinforced polyamide black colour; hexagonal insert made of nickel plated brass; eyebolt, screw, nut and washers made of stainless steel AISI 304.
FEATURES: Max tightening torque 4 Kg·m.
BOX QUANTITY: 24 pieces.
ON REQUEST:
- **Brackets:** In reinforced polypropylene, other colours.
- **Box quantity:** According to your request.

Guide rail bracket
(reinforced type with adjustable high type head)

Part. **281**

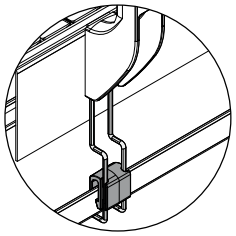

Presetting for
drip tray support
(see on page 29)

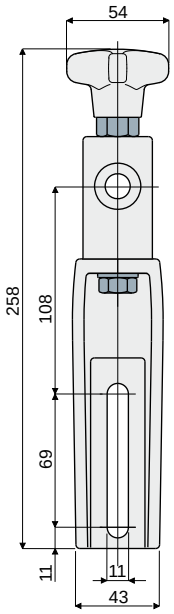

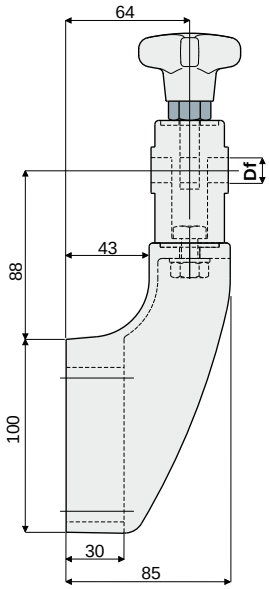

Df Bore for pin of (mm)	Code
12	**281 / 82130**
14	**281 / 82131**
16	**281 / 82132**

MATERIALS: Bracket and knob made of reinforced polyamide black colour; hexagonal insert made of nickel plated brass; eyebolt, screw, nut and washers made of stainless steel AISI 304.
FEATURES: To be used for heavy applications, suitable in conveyors with more ways, both in accumulation and curve. Max tightening torque 4 Kg·m.
BOX QUANTITY: 24 pieces.
ON REQUEST:
- **Brackets:** In reinforced polypropylene, other colours.
- **Box quantity:** According to your request.

Guide rail brackets

Part. 279 Guide rail bracket
(with adjustable head)

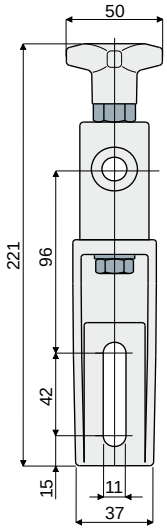

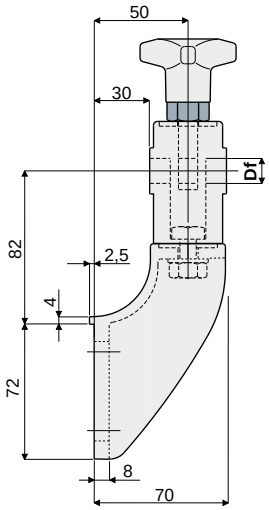

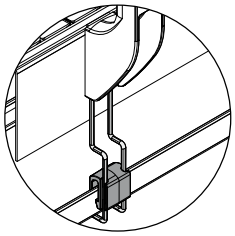

Presetting for drip tray support (see on page 29)

Df Bore for pin of (mm)	Code
12	279 / 82124
14	279 / 82125
16	279 / 82126

MATERIALS: Bracket and knob made of reinforced polyamide black colour; hexagonal insert made of nickel plated brass; eyebolt, screw, nut and washer made of stainless steel AISI 304.
FEATURES: Max tightening torque 4 Kg·m.
BOX QUANTITY: 24 pieces.
ON REQUEST:
- **Brackets:** In reinforced polypropylene, other colours.
- **Box quantity:** According to your request.

Part. 216 Guide rail bracket
(with metal adjustable head)

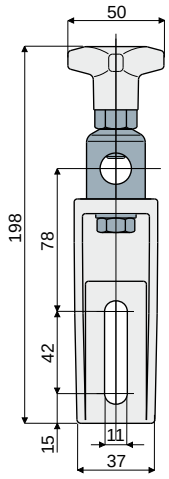

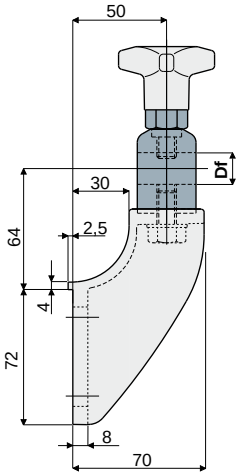

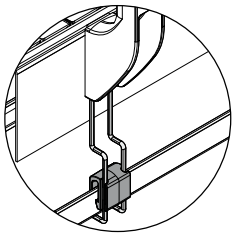

Presetting for drip tray support (see on page 29)

Df Bore for pin of (mm)	Code
14 - 16	216 / 80759

MATERIALS: Bracket and knob made out of reinforced polyamide black colour; head made out of stainless steel AISI 304; hexagonal insert made out of nickel plated brass; screw and washer made out of stainless steel AISI 304.
FEATURES: Possibility to use pins with diameter 14 and 16 mm. Max tightening torque 4 Kg·m.
BOX QUANTITY: 24 pieces.
ON REQUEST:
- **Brackets:** In reinforced polypropylene, other colours.
- **Box quantity:** According to your request.

Guide rail brackets

Guide rail bracket Part. 218
(with metal adjustable head)

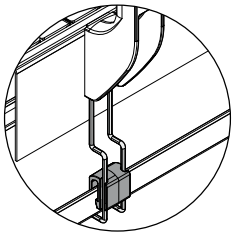

Presetting for
drip tray support
(see on page 29)

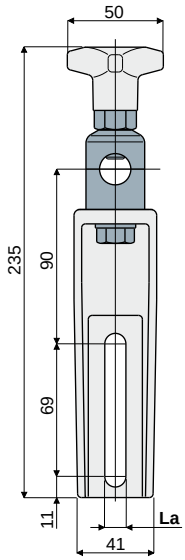

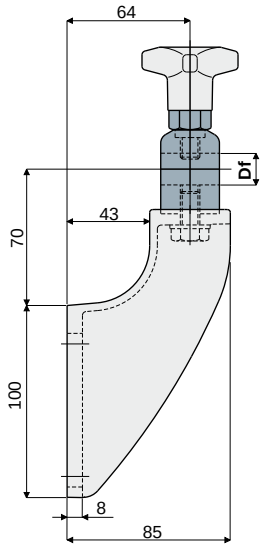

La (9 mm slot)	
Df Bore for pin of (mm)	Code
14 - 16	**218 / 82113**

La (11 mm slot)	
Df Bore for pin of (mm)	Code
14 - 16	**218 / 80663**

MATERIALS: Bracket and knob made out of reinforced polyamide black colour; head made out of stainless steel AISI 304; hexagonal insert made out of nickel plated brass; screw and washer made out of stainless steel AISI 304.

FEATURES: Possibility to use pins with diameter 14 and 16 mm. Max tightening torque 4 Kg·m.

BOX QUANTITY: 24 pieces.

ON REQUEST:

- **Brackets:** In reinforced polypropylene, other colours.
- **Box quantity:** According to your request.

Guide rail bracket Part. 244
(reinforced type with metal adjustable head)

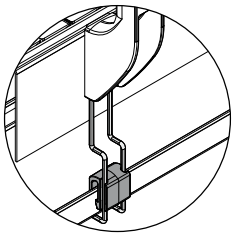

Presetting for
drip tray support
(see on page 29)

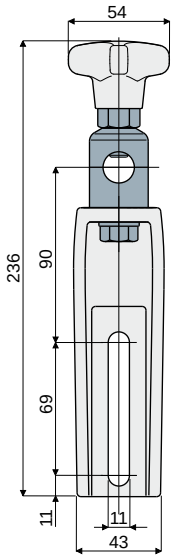

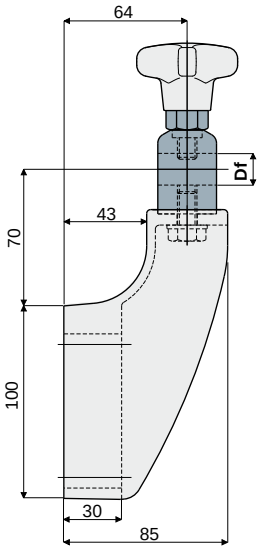

Df Bore for pin of (mm)	Code
14 - 16	**244 / 81007**

MATERIALS: Bracket and knob made out of reinforced polyamide black colour; head made out of stainless steel AISI 304; hexagonal insert made out of nickel plated brass; screw and washer made out of stainless steel AISI 304.

FEATURES: To be used for heavy applications, suitable in conveyors with more ways, both in accumulation and curve. Possibility to use pins with diameter 14 and 16 mm. Max tightening torque 4 Kg·m.

BOX QUANTITY: 24 pieces.

ON REQUEST:

- **Brackets:** In reinforced polypropylene, other colours.
- **Box quantity:** According to your request.

Guide rail brackets

Part. 488

Guide rail bracket
(reinforced type with adjustable head)

NEW

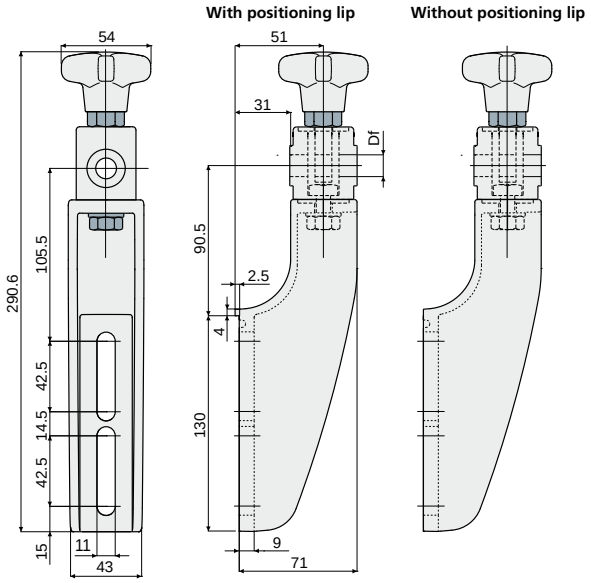

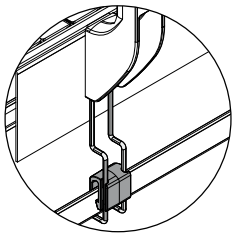

Presetting for drip tray support (see on page 29)

Df Bore for pin of (mm)	With positioning lip Code	Without positioning lip Code
12	488 / 86193	488 / 86194
14	488 / 86195	488 / 86196
16	488 / 86197	488 / 86198

MATERIALS: Bracket and knob made of reinforced polyamide black colour; hexagonal insert made of nickel plated brass; eyebolt, screw, nut and washers made of stainless steel AISI 304.
FEATURES: Max tightening torque 4 Kg·m.
BOX QUANTITY: 24 pieces.
ON REQUEST:
- **Brackets:** In reinforced polypropylene, other colours.
- **Box quantity:** According to your request.

Part. 489

Guide rail bracket
(reinforced type with adjustable high type head)

NEW

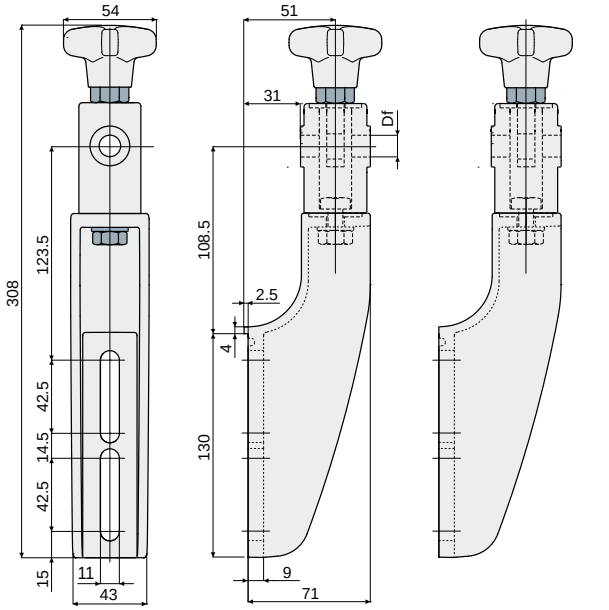

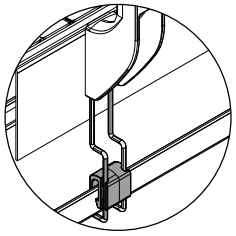

Presetting for drip tray support (see on page 29)

Df Bore for pin of (mm)	With positioning lip Code	Without positioning lip Code
12	489 / 86199	489 / 87000
14	489 / 87001	489 / 87002
16	489 / 87003	489 / 87004

MATERIALS: Bracket and knob made of reinforced polyamide black colour; hexagonal insert made of nickel plated brass; eyebolt, screw, nut and washers made of stainless steel AISI 304.
FEATURES: Max tightening torque 4 Kg·m.
BOX QUANTITY: 24 pieces.
ON REQUEST:
- **Brackets:** In reinforced polypropylene, other colours.
- **Box quantity:** According to your request.

Guide rail brackets

Guide rail bracket
(reinforced type with metal adjustable head)

Part. **490**

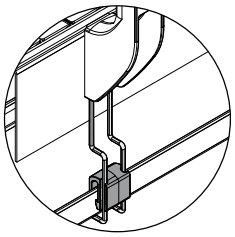

Presetting for
drip tray support
(see on page 29)

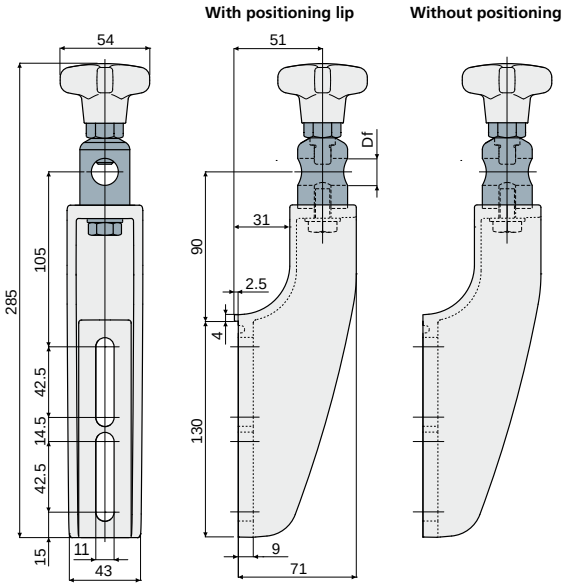

Df Bore for pin of	With positioning lip	Without positioning lip
(mm)	Code	Code
16	**490 / 87005**	**490 / 87006**

MATERIALS: Bracket and knob made of reinforced polyamide black colour; head made out of stainless steel AISI 304; hexagonal insert made of nickel plated brass; eyebolt and washer made of stainless steel AISI 304.
FEATURES: Max tightening torque 4 Kg·m.
BOX QUANTITY: 24 pieces.
ON REQUEST:
- **Brackets:** In reinforced polypropylene, other colours.
- **Box quantity:** According to your request.

Guide rail bracket
(reinforced type with adjustable head)

Part. **491**

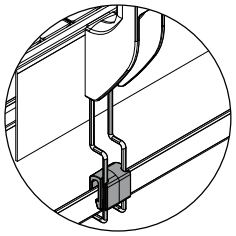

Presetting for
drip tray support
(see on page 29)

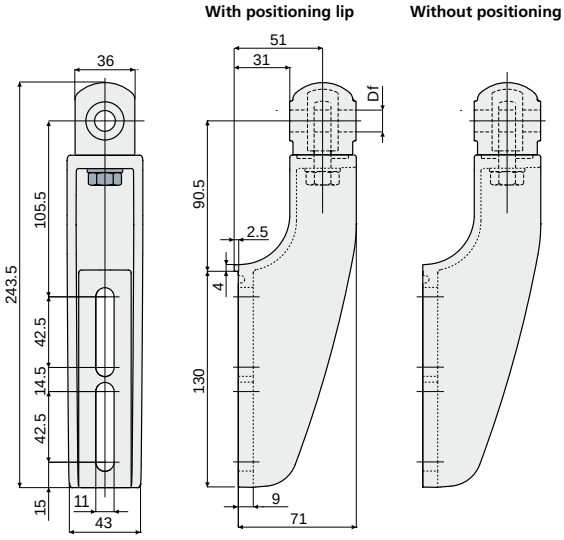

Df Bore for pin of	With positioning lip	Without positioning lip
(mm)	Code	Code
12	**491 / 87007**	**491 / 87008**
14	**491 / 87009**	**491 / 87010**
16	**491 / 87011**	**491 / 87012**

MATERIALS: Bracket and knob made of reinforced polyamide black colour; hexagonal insert made of nickel plated brass; eyebolt, nut and washer made of stainless steel AISI 304.
FEATURES: To be used for heavy applications, suitable in conveyors with more ways, both in accumulation and curve. Max tightening torque 4 Kg·m.
BOX QUANTITY: 24 pieces.
ON REQUEST:
- **Brackets:** In reinforced polypropylene, other colours.
- **Box quantity:** According to your request.

Guide rail brackets

Part. 255 Guide rail bracket
(reinforced type with adjustable head)

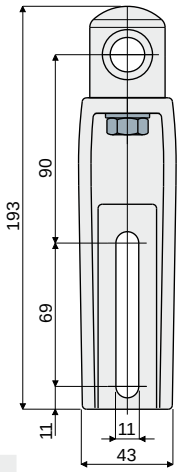

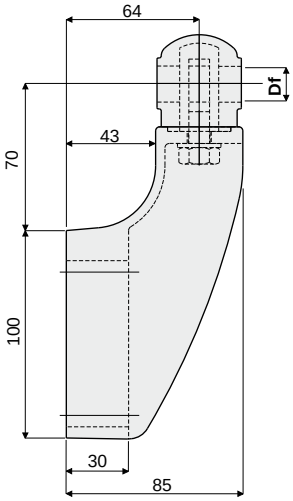

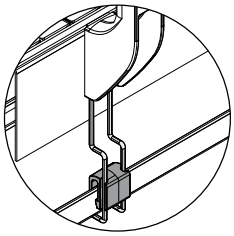

Presetting for drip tray support (see on page 29)

Df Bore for pin of (mm)	Code
12	255 / 81008
14	255 / 81009
16	255 / 81010

MATERIALS: Bracket and head made of reinforced polyamide black colour; eyebolt, nut and washer made of stainless steel AISI 304.
FEATURES: To be used for heavy applications, suitable in conveyors with more ways, both in accumulation and curve. Max tightening torque 4 Kg·m.
BOX QUANTITY: 24 pieces.
ON REQUEST:
- **Brackets:** In reinforced polypropylene, other colours.
- **Box quantity:** According to your request.

Part. 219 Guide rail bracket
(with adjustable head)

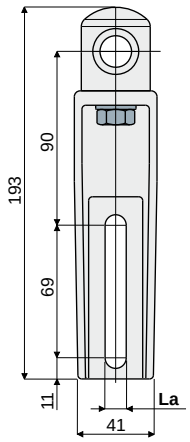

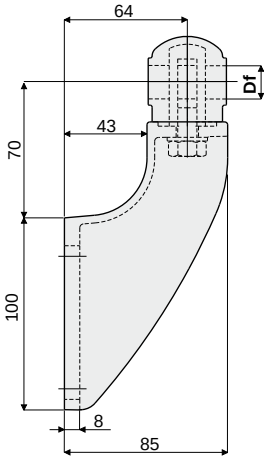

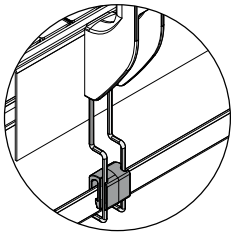

Presetting for drip tray support (see on page 29)

Df Bore for pin of (mm)	La (9 mm slot) Code	La (11 mm slot) Code
12	219 / 82114	219 / 80664
14	219 / 82115	219 / 80665
16	219 / 82116	219 / 80666

MATERIALS: Bracket and head made of reinforced polyamide black colour; eyebolt, nut and washer made of stainless steel AISI 304.
FEATURES: Max tightening torque 4 Kg·m.
BOX QUANTITY: 24 pieces.
ON REQUEST:
- **Brackets:** In reinforced polypropylene, other colours.
- **Box quantity:** According to your request.

Guide rail brackets

Guide rail bracket
(with adjustable head)

Part. **217**

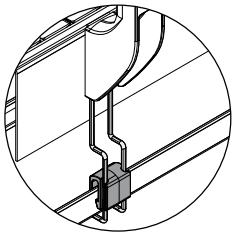

Presetting for
drip tray support
(see on page 29)

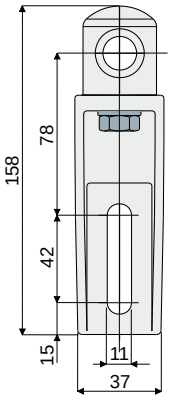

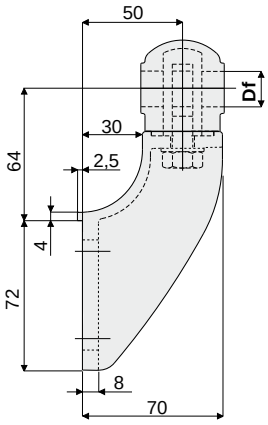

Df Bore for pin of (mm)	Code
12	217 / 80760
14	217 / 80761
16	217 / 80762

MATERIALS: Bracket and head made of reinforced polyamide black colour; eyebolt, nut and washer made of stainless steel AISI 304.
FEATURES: Max tightening torque 4 Kg·m.
BOX QUANTITY: 24 pieces.
ON REQUEST:
- **Brackets:** In reinforced polypropylene, other colours.
- **Box quantity:** According to your request.

Guide rail bracket
(for adjustable heads)

Part. **209**

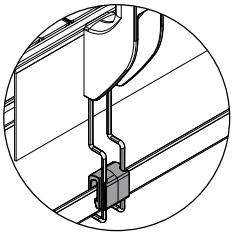

Presetting for
drip tray support
(see on page 29)

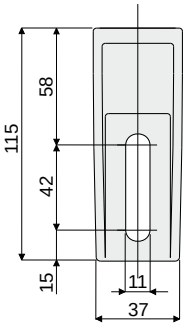

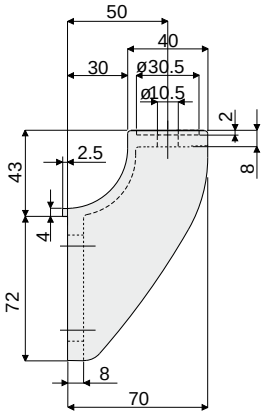

Code
209 / 80754

MATERIALS: Bracket made out of reinforced polyamide black colour.
FEATURES: To be used with heads Part.221, 222, 223 and 266.
BOX QUANTITY: 24 pieces.
ON REQUEST:
- **Brackets:** In reinforced polypropylene, other colours.
- **Box quantity:** According to your request.

Guide rail brackets

Part. 220 Guide rail bracket
(for adjustable heads)

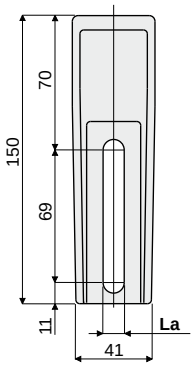

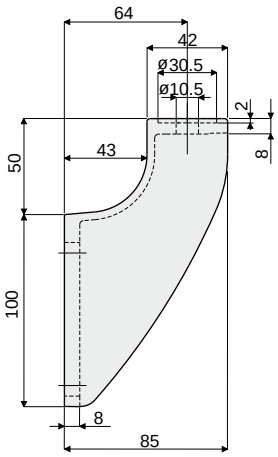

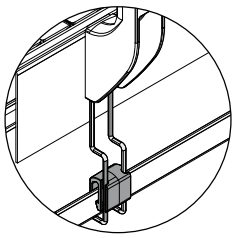

Presetting for
drip tray support
(see on page 29)

La (9 mm slot)	La (11 mm slot)
Code	Code
220 / 82111	220 / 80667

MATERIALS: Bracket made out of reinforced polyamide black colour.
FEATURES: To be used with heads Part.221, 222, 223 and 266.
BOX QUANTITY: 24 pieces.
ON REQUEST:
- Brackets: In reinforced polypropylene, other colours.
- Box quantity: According to your request.

Part. 242 Guide rail bracket
(reinforced type for adjustable head)

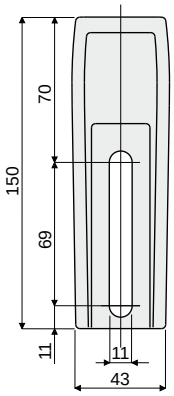

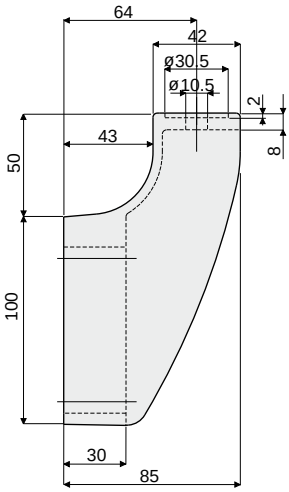

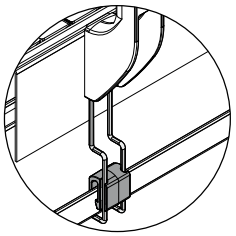

Presetting for
drip tray support
(see on page 29)

Code
242 / 81002

MATERIALS: Bracket made of reinforced polyamide black colour.
FEATURES: To be used with heads Part.221, 222, 223 and 266 for heavy applications.
Suitable in conveyors with more ways, both in accumulation and curve.
BOX QUANTITY: 24 pieces.
ON REQUEST:
- Brackets: In reinforced polypropylene, other colours.
- Box quantity: According to your request.

Guide rail brackets

Guide rail bracket
(reinforced type for adjustable heads)

Part. **486**

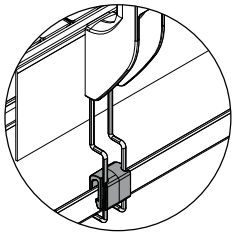

Presetting for
drip tray support
(see on page 29)

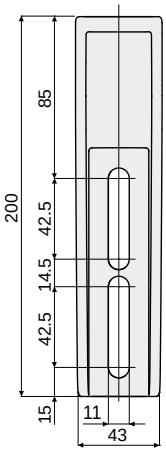

With positioning lip

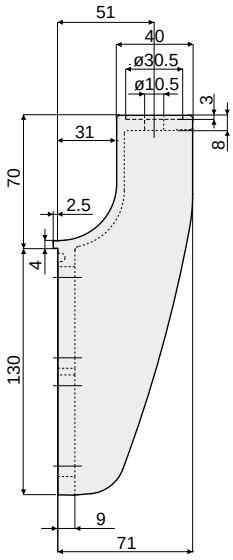

Without positioning lip

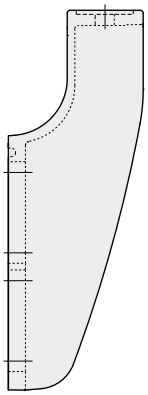

NEW

With positioning lip	Without positioning lip
Code	Code
486 / 86189	**486 / 86190**

MATERIALS: Bracket made out of reinforced polyamide black colour.
FEATURES: To be used with heads Part.221, 222, 223 and 266.
BOX QUANTITY: 24 pieces.
ON REQUEST:
- **Brackets:** In reinforced polypropylene, other colours.
- **Box quantity:** According to your request.

Spacer for bracket

Part. **487**

With positioning lip

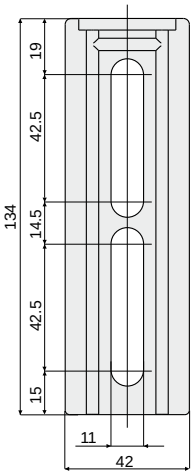

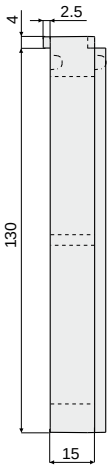

Without positioning lip

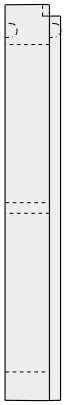

NEW

With positioning lip	Without positioning lip
Code	Code
487 / 86191	**487 / 86192**

MATERIALS: Spacer made of reinforced polyamide black colour.
FEATURES: Accessory to be used with brackets Part.486, 488, 489, 490, 491.
BOX QUANTITY: 24 pieces.
ON REQUEST:
- **Spacers:** In reinforced polypropylene, other colours.
- **Box quantity:** According to your request.

Guide rail brackets

Part. 224 Spacer for bracket

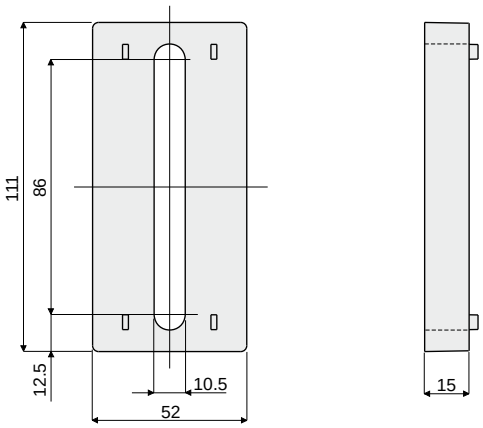

Code
224 / 80676

MATERIALS: Spacer made of reinforced polyamide black colour.
FEATURES: Accessory to be used with brackets Part.215, 218, 219, 220, 242, 243, 244, 255, 280, 281.
BOX QUANTITY: 24 pieces.
ON REQUEST:

- Spacers: In reinforced polypropylene, other colours.
- Box quantity: According to your request.

Part. 225 Spacer for bracket

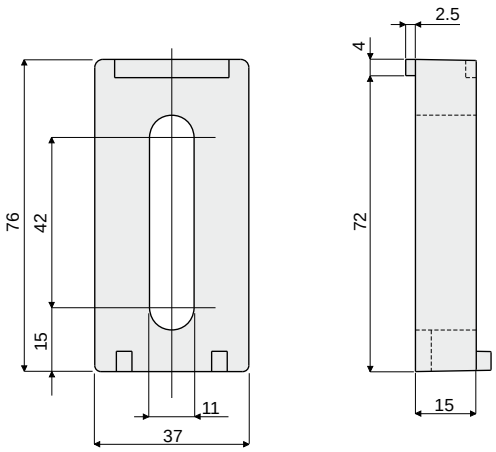

Code
225 / 80677

MATERIALS: Spacer made of reinforced polyamide black colour.
FEATURES: Accessory to be used with brackets Part.213, 214, 216, 217, 209, 279.
BOX QUANTITY: 24 pieces.
ON REQUEST:

- Spacers: In reinforced polypropylene, other colours.
- Box quantity: According to your request.

Guide rail brackets

Drip tray support

Part. **236**

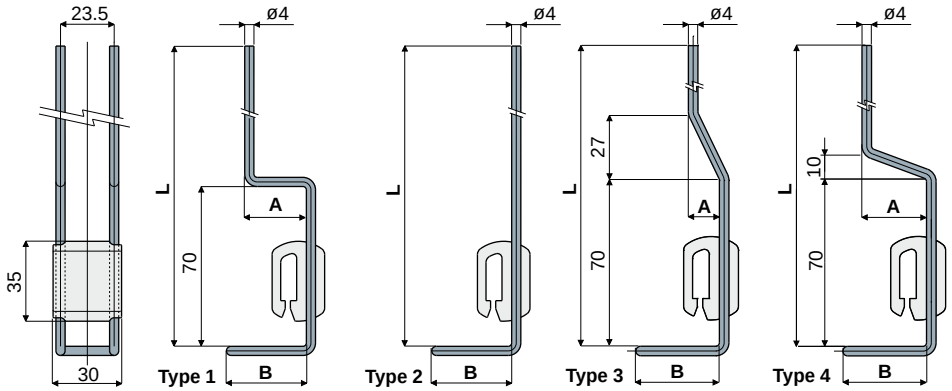

L (mm)	B (mm)	A (mm)	Type 1 Code
180	35	27	**236 / 80779**
180	35	17	**236 / 81012**
230	35	27	**236 / 82683**

L (mm)	B (mm)	Type 2 Code
200	35	**236 / 80780**
246	35	**236 / 81013**

L (mm)	B (mm)	A (mm)	Type 3 Code
250	35	13	**236 / 82640**

L (mm)	B (mm)	A (mm)	Type 4 Code
280	35	27	**236 / 82949**

MATERIALS: Support elements made of stainless steel AISI 304; body of coupling made of reinforced polyamide black colour.
FEATURES: To be used to support drip trays.
BOX QUANTITY: 24 pieces.
ON REQUEST:

- **Drip tray supports:** Supplied in different shapes and sizes.
- **Box quantity:** According to your request.

Mounting plate
(for drip tray support)

Part. **235**

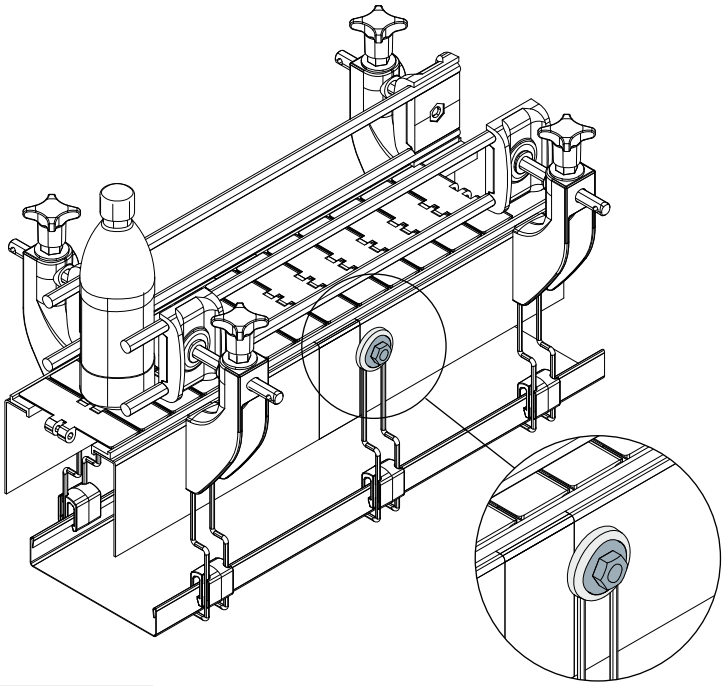

Example of application

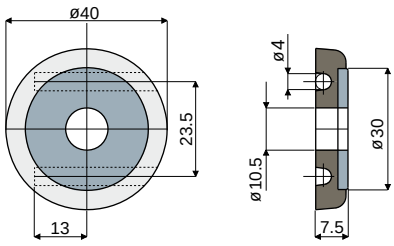

Code
235 / 80778

MATERIALS: Plate made of reinforced polyamide black colour; washer made of stainless steel AISI 304.
FEATURES: For application on conveyor side to fasten drip tray support.
BOX QUANTITY: 24 pieces.
ON REQUEST:

- **Box quantity:** According to your request.

Guide rail brackets

Part. 387 Bracket 90°
(70 mm x 70 mm)

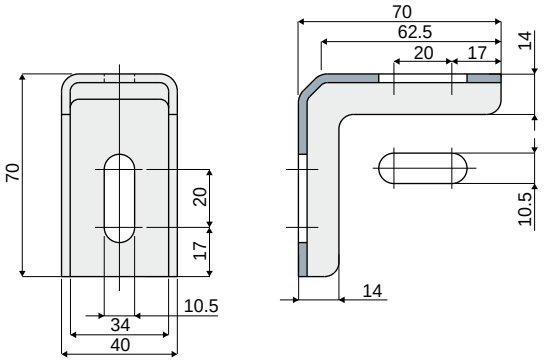

Code
387 / 84128

MATERIALS: Bracket in stainless steel AISI 304.
BOX QUANTITY: 24 pieces.
ON REQUEST:
- Box quantity: According to your request.

Part. 392 Bracket 90°
(70 mm x 140 mm)

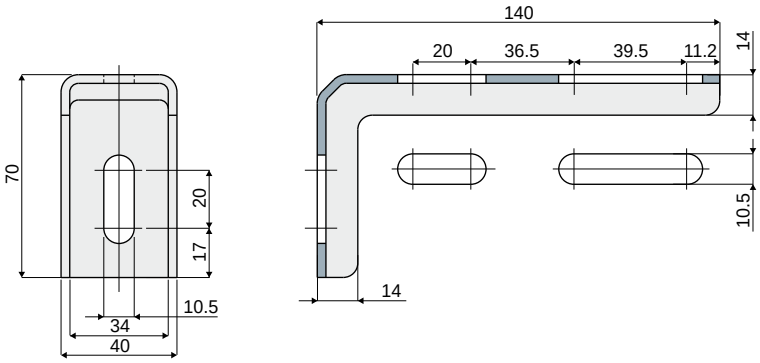

Code
392 / 84130

MATERIALS: Bracket in stainless steel AISI 304.
BOX QUANTITY: 24 pieces.
ON REQUEST:
- Box quantity: According to your request.

Part. 436 Bracket 90°
(83 mm x 98 mm)

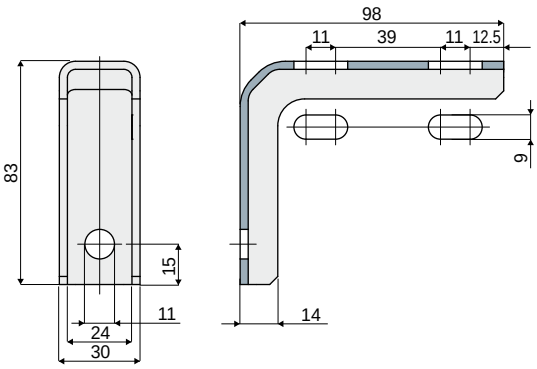

Code
436 / 85215

MATERIALS: Bracket in stainless steel AISI 304.
BOX QUANTITY: 24 pieces.
ON REQUEST:
- Box quantity: According to your request.

Guide rail brackets

Example of application

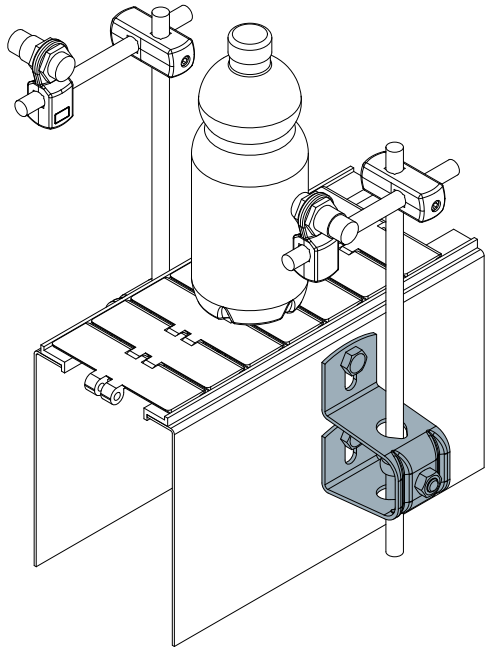

Guide rail bracket
(compact version)

Part. **408**

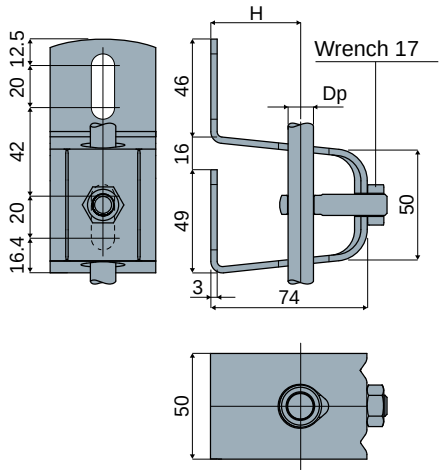

Dp Pin diameter (mm)	H (mm)	Code
12	49	408 / 84337
14	47	408 / 84338
16	46	408 / 84339

MATERIALS: Bracket, eyebolt and nut made of stainless steel AISI 304.
FEATURES: Supplied complete with bolts and nuts.
BOX QUANTITY: 8 pieces.
ON REQUEST:
- Box quantity: According to your request.
- Assembly of: Eyebolts, nuts.

Example of application

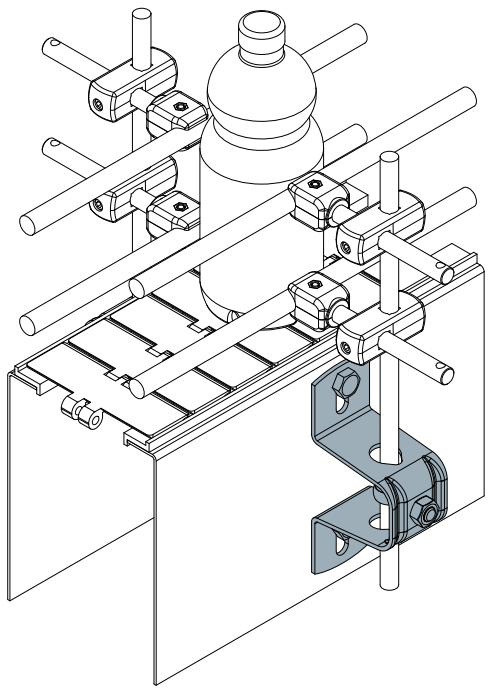

Guide rail bracket
(compact version)

Part. **408**

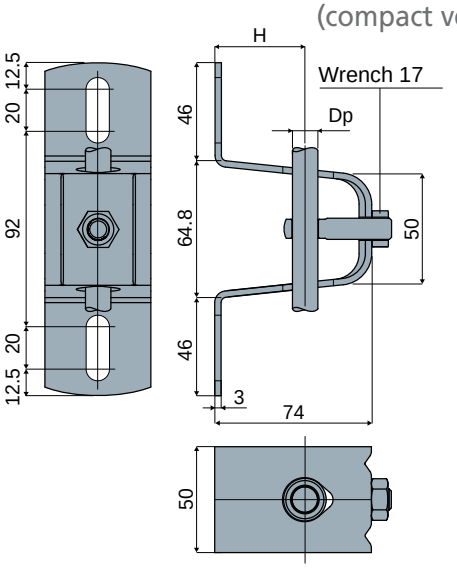

Dp Pin diameter (mm)	H (mm)	Code
12	49	408 / 84334
14	47	408 / 84335
16	46	408 / 84336

MATERIALS: Bracket, eyebolt and nut made of stainless steel AISI 304.
FEATURES: Supplied complete with bolts and nuts.
BOX QUANTITY: 8 pieces.
ON REQUEST:
- Box quantity: According to your request.
- Assembly of: Eyebolts, nuts.

Guide rail brackets

Part. 442 Guide rail bracket

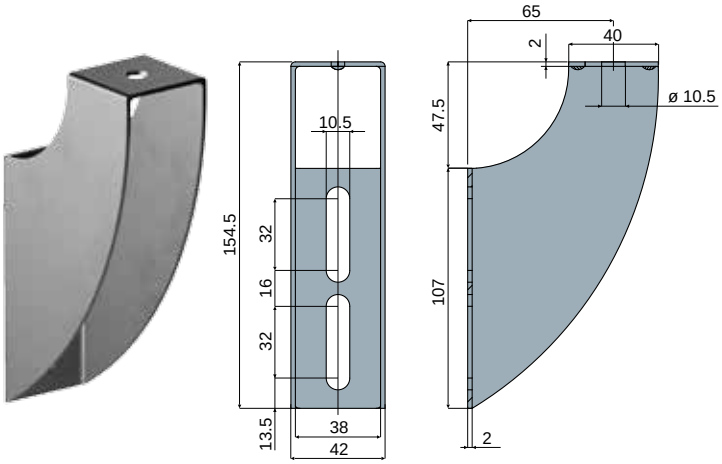

Code
442 / 85242

MATERIALS: Bracket made of stainless steel AISI 304.
BOX QUANTITY: 24 pieces.
ON REQUEST:
- **Box quantity:** According to your request.

Example of application

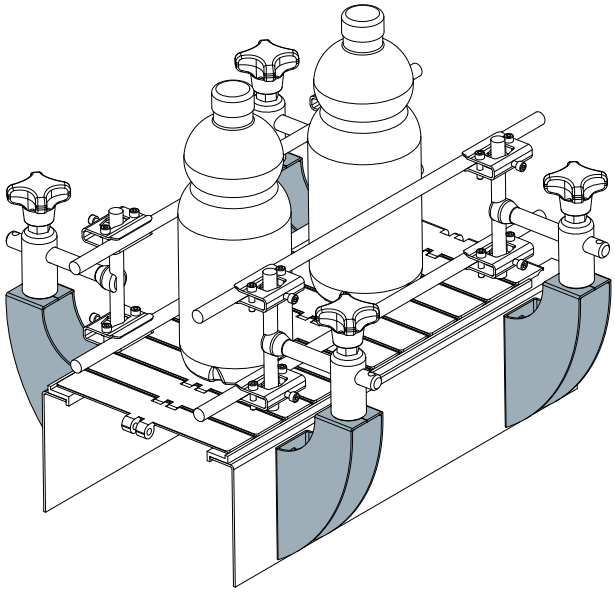

Part. 441 Guide rail bracket

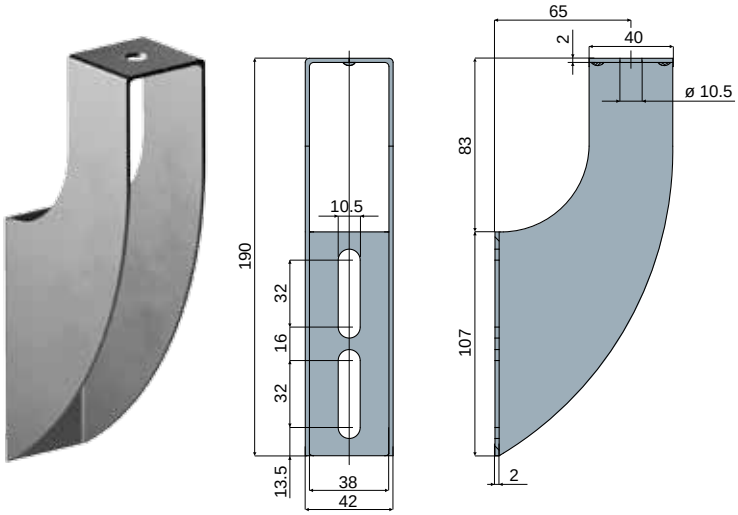

Code
441 / 85241

MATERIALS: Bracket made of stainless steel AISI 304.
BOX QUANTITY: 24 pieces.
ON REQUEST:
- **Box quantity:** According to your request.

Example of application

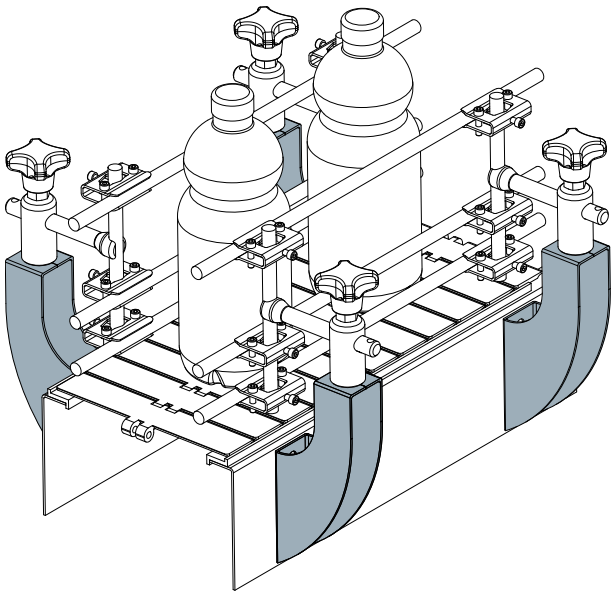

Tightening eyebolts

Example of application

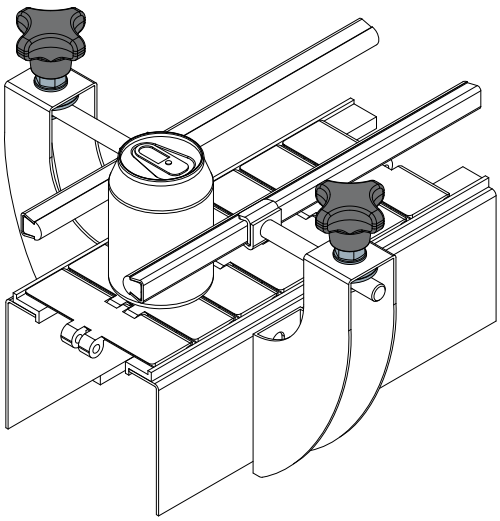

Tightening eyebolt (with knob) Part. 406

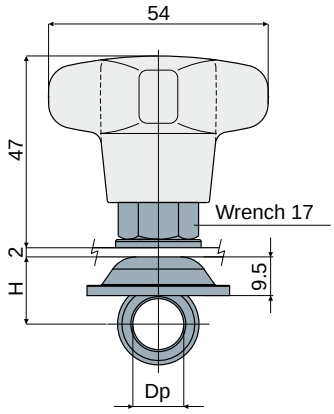

Dp Pin diameter (mm)	H (mm)	Code
12	15.5	406 / 84328
14	16.5	406 / 84329
16	17.5	406 / 84330

MATERIALS: Eyebolt and washers made of stainless steel AISI 304, threaded bushing in nickel plated brass; knob in reinforced polyamide black colour.
FEATURES: Supplied complete with bolts and nuts.
BOX QUANTITY: 24 pieces.
ON REQUEST:

- Assembly of: Eyebolts, washers and nuts.
- Box quantity: According to your request.

Example of application

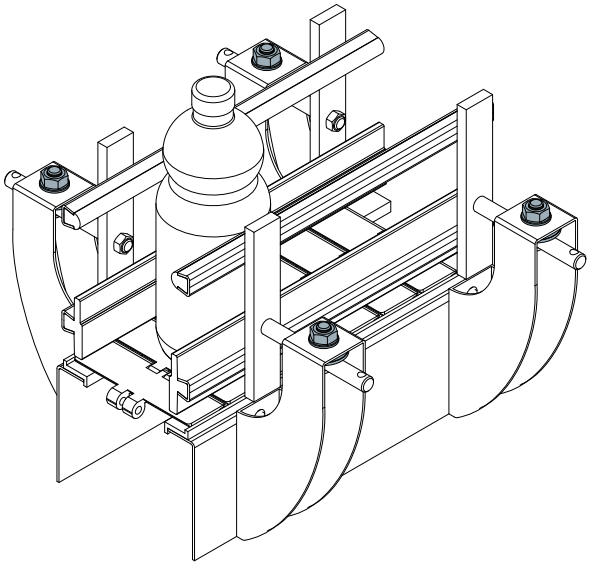

Tightening eyebolt (with nut) Part. 407

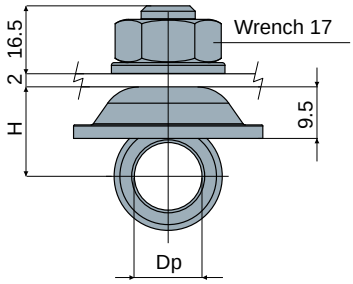

Dp Pin diameter (mm)	H (mm)	Code
12	15.5	407 / 84331
14	16.5	407 / 84332
16	17.5	407 / 84333

MATERIALS: Eyebolt, washers and nuts made of stainless steel AISI 304.
FEATURES: Supplied complete with bolts and nuts.
BOX QUANTITY: 24 pieces.
ON REQUEST:

- Assembly of: Eyebolts, washers and nuts.
- Box quantity: According to your request.

Heads for brackets

Part. 222 Head for bracket

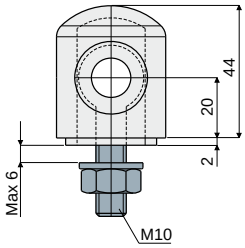

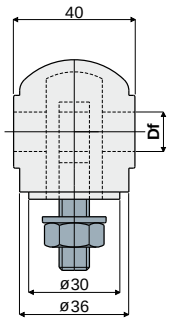

Df Bore for pin of (mm)	Code
12	222 / 80671
14	222 / 80672
16	222 / 80673

MATERIALS: Head made of reinforced polyamide black colour; eyebolt, nut and washer made of stainless steel AISI 304.
FEATURES: To be used with bracket Part.209, 220, 242, 441, 442, 486. Max tightening torque 4 Kg·m.
BOX QUANTITY: 24 pieces.
ON REQUEST:
- **Heads:** In reinforced polypropylene, other colours.
- **Box quantity:** According to your request.

Part. 221 Head for bracket

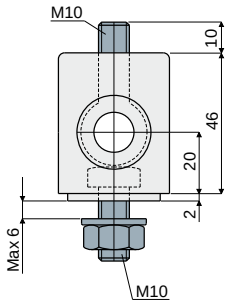

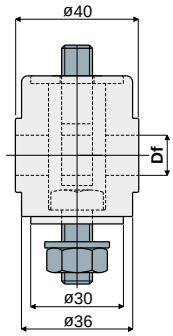

Df Bore for pin of (mm)	Code
12	221 / 80668
14	221 / 80669
16	221 / 80670

MATERIALS: Head made of reinforced polyamide black colour; eyebolt, screw, nut and washers made of stainless steel AISI 304.
FEATURES: To be used with bracket Part.209, 220, 242, 441, 442, 486. Max tightening torque 4 Kg·m.
BOX QUANTITY: 24 pieces.
ON REQUEST:
- **Heads:** In reinforced polypropylene, other colours.
- **Box quantity:** According to your request.

Part. 266 Head for bracket (high type)

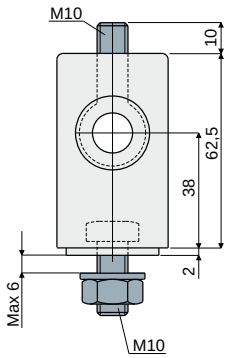

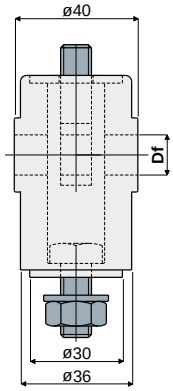

Df Bore for pin of (mm)	Code
12	266 / 82035
14	266 / 82036
16	266 / 82037

MATERIALS: Head made of reinforced polyamide black colour; eyebolt, nuts and washer made of stainless steel AISI 304.
FEATURES: To be used with bracket Part.209, 220, 242, 441, 442, 486. Max tightening torque 4 Kg·m.
BOX QUANTITY: 24 pieces.
ON REQUEST:
- **Heads:** Made of reinforced polypropylene, other colours.
- **Box quantity:** According to your request.

Heads for brackets

Head for bracket
(metal)

Part. **223**

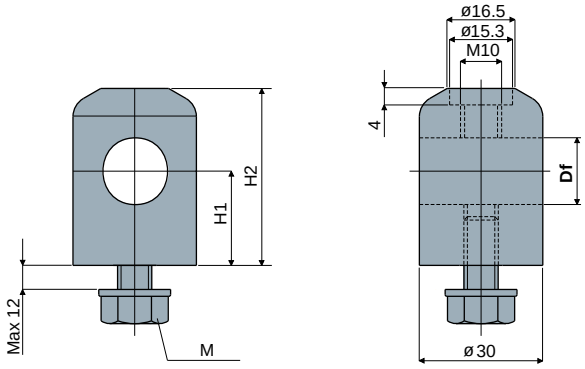

M	Df Bore for pin of (mm)	(inches)	H1 (mm)	H2 (mm)	Code
M8x16	14 - 16	-	23	43	**223 / 84544**
M10x16	14 - 16	-	23	43	**223 / 84226**
M10x20	12,7	1/2"	23	43	**223 / 84543**
M10x20	14 - 16	-	23	43	**223 / 80675**
	14 - 16	-	40	60	**223 / 84542**
	14 - 16	-	60	80	**223 / 83640**

MATERIALS: Head made out of stainless steel AISI 304; screw and washer made out of stainless steel AISI 304.
FEATURES: To be used with Part.209, 220, 242, 441, 442, 486. Max tightening torque 4 Kg·m.
Possibility to use pins with diameter 12.7, 14, 16 mm and 1/2".
BOX QUANTITY: 24 pieces.
ON REQUEST:
- **Heads:** In different lengths.
- **Box quantity:** According to your request.

Spacer for heads

Part. **256**

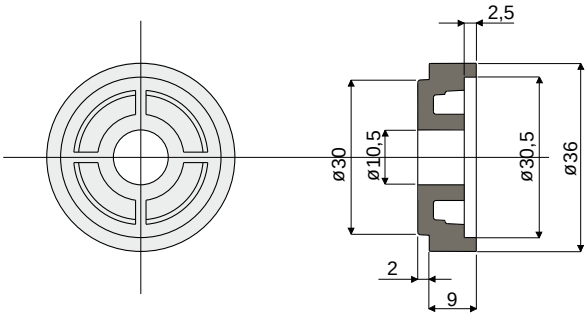

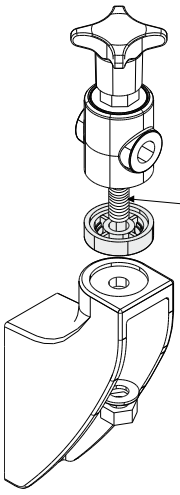

Example of application

N.B.: To use the spacer, it is necessary to change the standard screw with a longer one.

Code
256 / 81011

MATERIALS: Spacer made of reinforced polyamide black colour.
FEATURES: Accessory to be used on brackets Part.214, 215, 216, 209, 220, 242, 218, 243, 244, 279, 280, 281, 486, 488, 489, 490 to increase heads height.
BOX QUANTITY: 24 pieces.
ON REQUEST:
- **Spacers:** In reinforced polypropylene, other colours.
- **Box quantity:** According to your request.

Knobs and handles

Part. 226 Knob for bracket

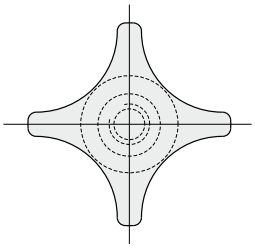

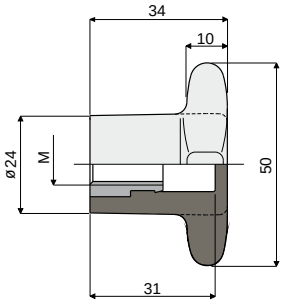

M	Code
M8	226 / 81147
M10	226 / 80678
M12	226 / 81148

MATERIALS: Knob made of reinforced polyamide black colour; threaded bushing made of nickel plated brass.
FEATURES: Accessory to be used with heads Part.221 and 266.
BOX QUANTITY: 24 pieces.
ON REQUEST:
- Knobs: In reinforced polypropylene, other colours.
- Box quantity: According to your request.

Part. 227 Knob for bracket

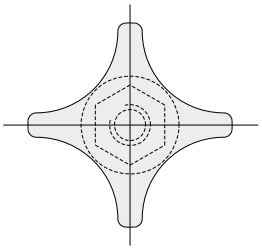

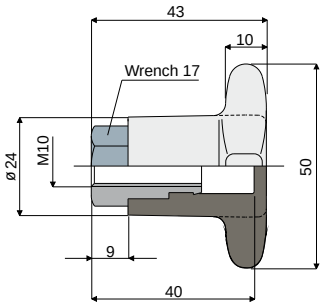

Code
227 / 80679

MATERIALS: Knob made of reinforced polyamide black colour; threaded bushing made of nickel plated brass.
FEATURES: Accessory to be used with heads Part.221 and 266.
BOX QUANTITY: 24 pieces.
ON REQUEST:
- Knobs: In reinforced polypropylene, other colours.
- Box quantity: According to your request.

Part. 228 Knob for bracket

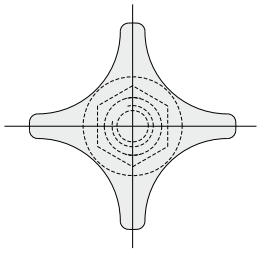

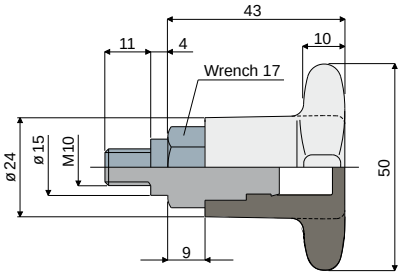

Code
228 / 80680

MATERIALS: Knob made of reinforced polyamide black colour; threaded bushing made of nickel plated brass.
FEATURES: Accessory to be used with head Part.223.
BOX QUANTITY: 24 pieces.
ON REQUEST:
- Knobs: In reinforced polypropylene, other colours.
- Box quantity: According to your request.

Knobs and handles

Knob for bracket (reinforced type) Part. 246

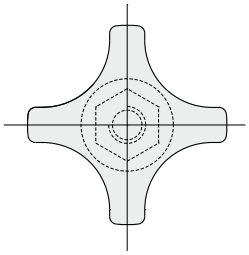

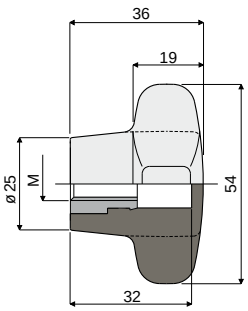

M	Code
M8	246 / 84473
M10	246 / 81135
M12	246 / 84870

MATERIALS: Knob made of reinforced polyamide black colour; threaded bushing is made of nickel plated brass.
FEATURES: Accessory to be applied to our heads Part.221 and Part.266.
BOX QUANTITY: 24 pieces.
ON REQUEST:
- Knobs: In reinforced polypropylene, other colours.
- Box quantity: According to your request.

Knob for bracket (reinforced type) Part. 247

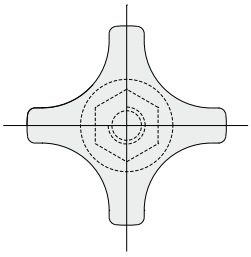

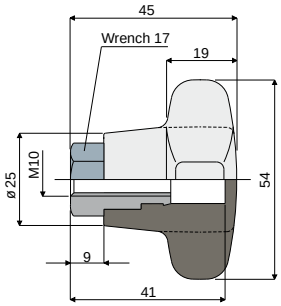

Code
247 / 81137

MATERIALS: Knob made of reinforced polyamide black colour; threaded bushing made of nickel plated brass.
FEATURES: Accessory to be applied to our heads Part.221 and Part.266.
BOX QUANTITY: 24 pieces.
ON REQUEST:
- Knobs: In reinforced polypropylene, other colours.
- Box quantity: According to your request.

Knob for bracket (reinforced type) Part. 248

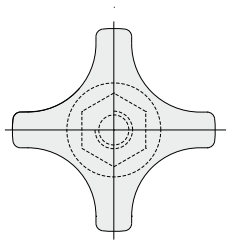

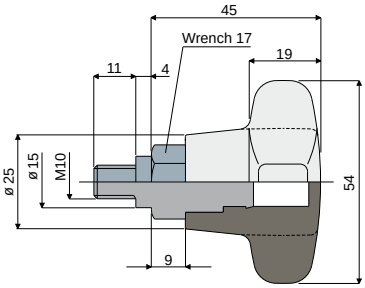

Code
248 / 81139

MATERIALS: Knob made of reinforced polyamide black colour; threaded insert made of nickel plated brass.
FEATURES: Accessory to be applied to our head Part.223.
BOX QUANTITY: 24 pieces.
ON REQUEST:
- Knobs: In reinforced polypropylene, other colours.
- Box quantity: According to your request.

Knobs and handles

Part. 313 Knob for bracket
(short type)

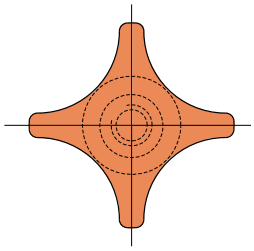

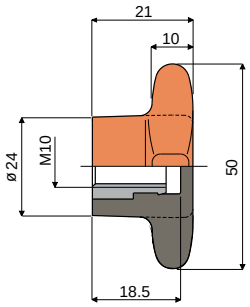

Code
313 / 82848

MATERIALS: Knob made of reinforced polyamide orange colour; threaded bushing made of nickel plated brass.
FEATURES: Accessory to be used with heads Part.221 and 266.
BOX QUANTITY: 24 pieces.
ON REQUEST:
- Knobs: In reinforced polypropylene, other colours.
- Box quantity: According to your request.

Part. 314 Knob for bracket
(short type)

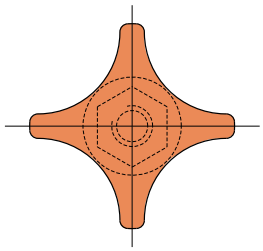

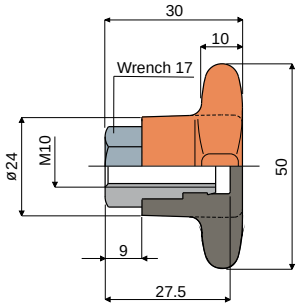

Code
314 / 82849

MATERIALS: Knob made of reinforced polyamide orange colour; threaded bushing made of nickel plated brass.
FEATURES: Accessory to be used with heads Part.221 and 266.
BOX QUANTITY: 24 pieces.
ON REQUEST:
- Knobs: In reinforced polypropylene, other colours.
- Box quantity: According to your request.

Part. 315 Knob for bracket
(short type)

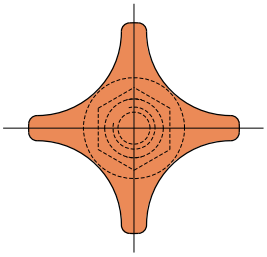

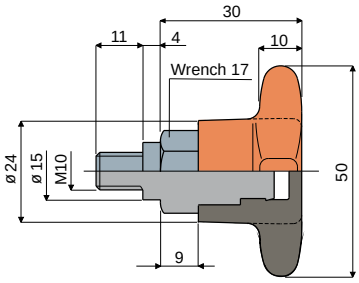

Code
315 / 82850

MATERIALS: Knob made of reinforced polyamide orange colour; threaded bushing made of nickel plated brass.
FEATURES: Accessory to be used with head Part.223.
BOX QUANTITY: 24 pieces.
ON REQUEST:
- Knobs: In reinforced polypropylene, other colours.
- Box quantity: According to your request.

Knobs and handles

Round handle (ø 44 mm) Part. 386

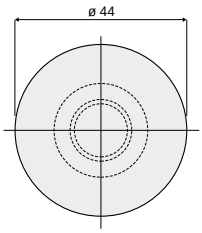

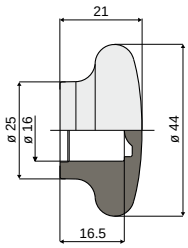

Code
386 / 84124

MATERIALS: Handle in reinforced polypropylene, orange colour.
FEATURES: To be used as protection for the pins edges; can be used with pin Part.301 (Dp = 16 mm.).
BOX QUANTITY: 24 pieces.
ON REQUEST:
- **Handles:** in reinforced polypropylene, different colours.
- **Box quantity:** according to your request.

Round handle (ø 44 mm) Part. 334

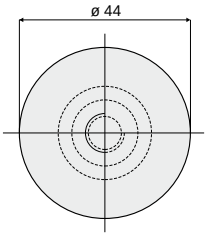

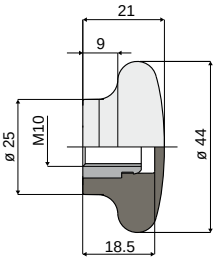

Code
334 / 83116

MATERIALS: Handle made of reinforced polyamide black colour; threaded bushing made of nickel plated brass.
FEATURES: Accessory to be used with heads Part.221 and 266.
BOX QUANTITY: 24 pieces.
ON REQUEST:
- **Handles:** In reinforced polypropylene, other colours.
- **Box quantity:** According to your request.

Round handle (ø 44 mm) Part. 337

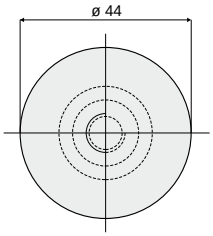

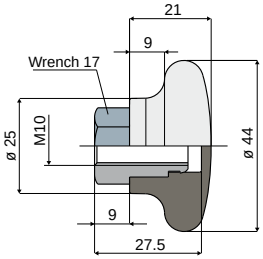

Code
337 / 83302

MATERIALS: Handle made of reinforced polyamide black colour; threaded bushing made of nickel plated brass.
FEATURES: Accessory to be used with heads Part.221 and 266.
BOX QUANTITY: 24 pieces.
ON REQUEST:
- **Handles:** In reinforced polypropylene, other colours.
- **Box quantity:** According to your request.

Round handle (ø 44 mm) Part. 338

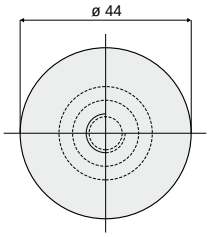

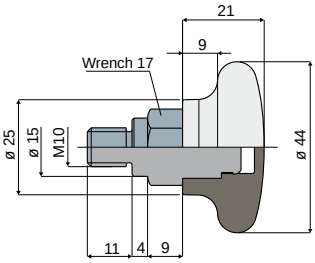

Code
338 / 83303

MATERIALS: Handle made of reinforced polyamide black colour; threaded bushing made of nickel plated brass.
FEATURES: Accessory to be used with head Part.223.
BOX QUANTITY: 24 pieces.
ON REQUEST:
- **Handles:** In reinforced polypropylene, other colours.
- **Box quantity:** According to your request.

Knobs and handles

Part. 382 Ball handle

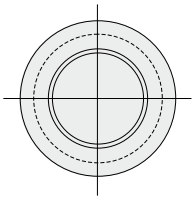

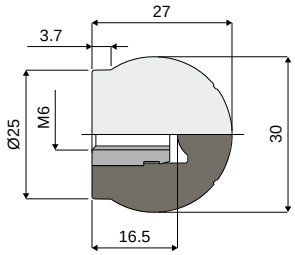

Code
382 / 84119

MATERIALS: Ball handle made of reinforced polyamide, black colour; threaded bushing in nickel plated brass.
BOX QUANTITY: 24 pieces.
ON REQUEST:
- Handles: Made in reinforced polypropylene, different colours.
- Box quantity: According to your request.

Part. 383 Knob

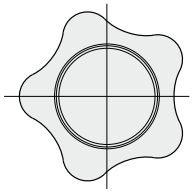

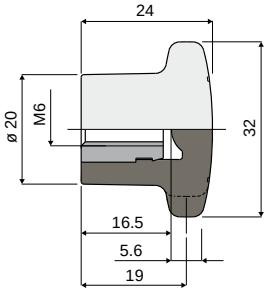

Code
383 / 84120

MATERIALS: Knob made of reinforced polyamide, black colour; threaded bushing in nickel plated brass.
BOX QUANTITY: 24 pieces.
ON REQUEST:
- Knobs: In reinforced polypropylene, other colours, with customized brand.
- Box quantity: According to your request.

Part. 350 Knob

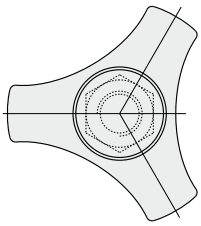

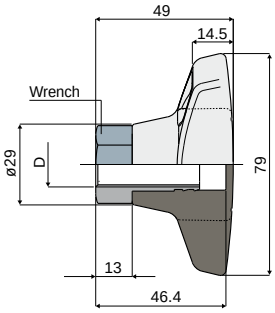

D	Wrench	Code
M12	19	350 / 83398
M16	24	350 / 83399

MATERIALS: Knob made of reinforced polyamide black colour; threaded bushing in nickel plated brass.
BOX QUANTITY: 24 pieces.
ON REQUEST:
- Knobs: In reinforced polypropylene, other colours, with customized brand.
- Box quantity: According to your request.

Part. 294 Knob for bracket
(reinforced type)

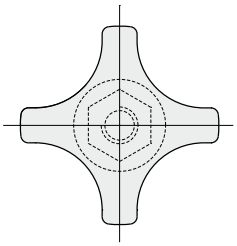

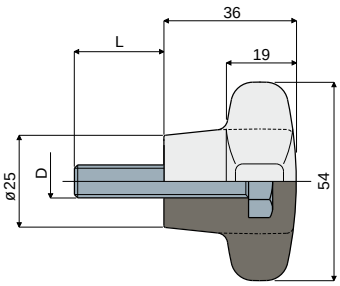

D (mm)	L (mm)	Code
M8	22	294 / 82805
M10	22	294 / 82588

MATERIALS: Knob made of reinforced polyamide black colour; bolt made of stainless steel AISI 304.
FEATURES: Accessory to be used with head Part.223.
BOX QUANTITY: 24 pieces.
ON REQUEST:
- Knobs: Made of reinforced polypropylene, in other colours, with bolts of different length and diameter.
- Box quantity: According to your request.

Knobs and handles

"T"- handle Part. 303

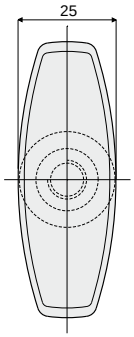

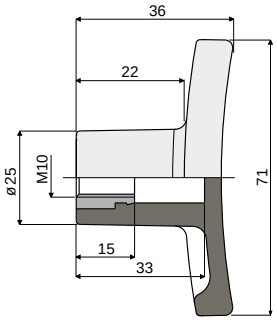

Code
303 / 82806

MATERIALS: Handle is made of reinforced polyamide black colour; threaded bushing is made of nickel plated brass.
FEATURES: Accessory to be used with heads Part.221 and 266.
BOX QUANTITY: 24 pieces.
ON REQUEST:
- Handles: made of reinforced polypropylene, other colours.
- Box quantity: According to your request.

"T"- handle Part. 304

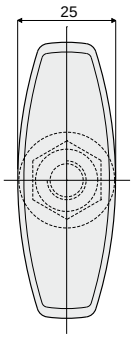

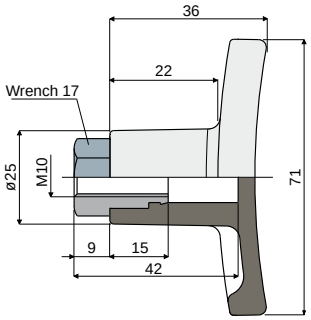

Code
304 / 82807

MATERIALS: Handle is made of reinforced polyamide black colour; threaded bushing is made of nickel plated brass.
FEATURES: Accessory to be used with heads Part.221 and 266.
BOX QUANTITY: 24 pieces.
ON REQUEST:
- Handles: made of reinforced polypropylene, other colours.
- Box quantity: According to your request.

"T"- handle Part. 305

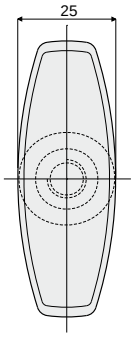

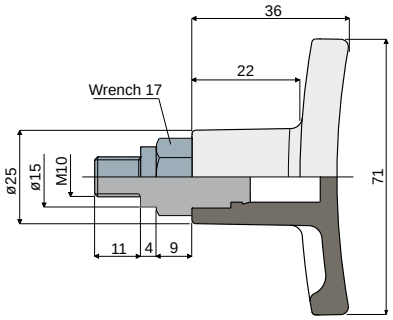

Code
305 / 82808

MATERIALS: Handle is made of reinforced polyamide black colour; threaded bushing is made of nickel plated brass.
FEATURES: Accessory to be used with heads Part.223.
BOX QUANTITY: 24 pieces.
ON REQUEST:
- Handles: made of reinforced polypropylene, other colours.
- Box quantity: According to your request.

Knobs and handles

Part. 397 Ratchet handle clamping

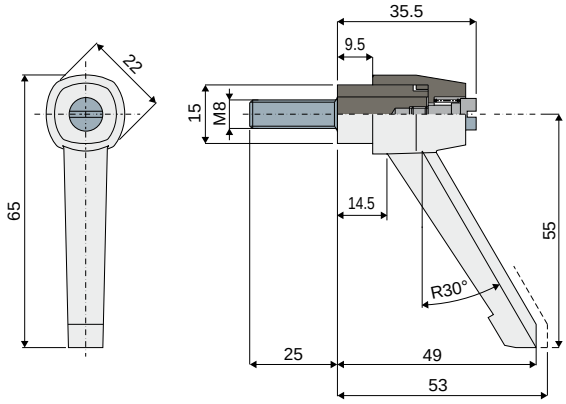

Code
397 / 84260

MATERIALS: Handle made of reinforced polyamide black colour; threaded insert made of stainless steel AISI 304.
BOX QUANTITY: 24 pieces.
ON REQUEST:
- Box quantity: According to your request.

Part. 400 Ratchet handle clamping

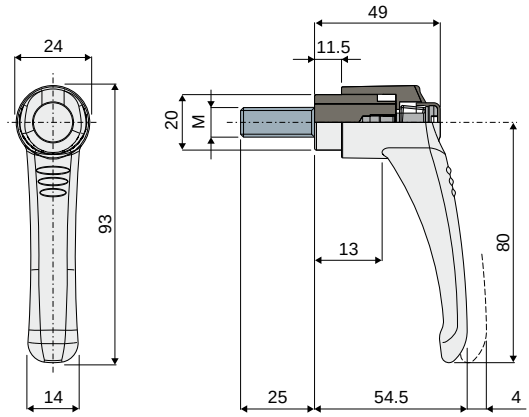

M	Code
M8	400 / 86693
M10	400 / 84316

NEW

MATERIALS: Handle made of reinforced polyamide black colour with push button in orange colour; threaded insert made of stainless steel AISI 304.
BOX QUANTITY: 24 pieces.
ON REQUEST:
- Box quantity: According to your request.

Part. 332 Ratchet handle clamping

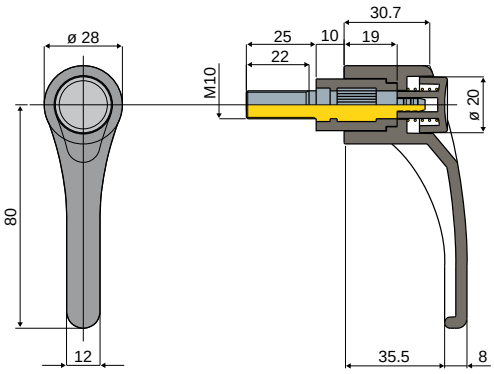

Code
332 / 83113

MATERIALS: Handle made of reinforced polyamide black colour with push button in orange colour; threaded insert made of zinc plated steel.
BOX QUANTITY: 24 pieces.
ON REQUEST:
- Handles: With threaded inserts M8, M10, M12, with different lengths; also available in stainless steel AISI 304.
- Box quantity: According to your request.

Guide rail clamps

Guide rail clamp (for trapezoidal rails) Part. 230

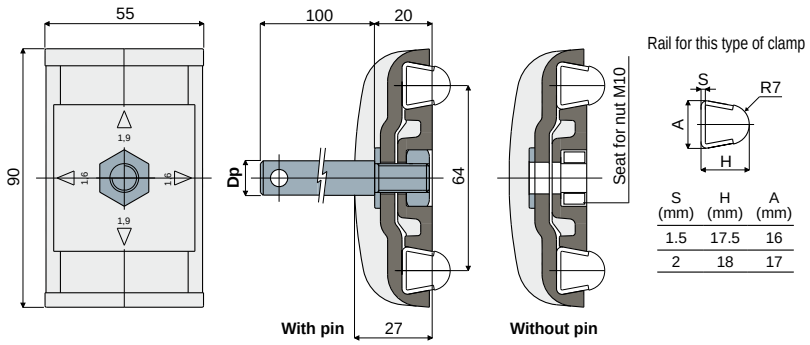

S (mm)	H (mm)	A (mm)
1.5	17.5	16
2	18	17

Dp Pin diameter (mm)	With pin Code	Without pin Code
12	230 / 80684	
14	230 / 80685	230 / 80611
16	230 / 80686	

MATERIALS: Clamp made of reinforced polyamide black colour; pin, nut and washer made of stainless steel AISI 304.
FEATURES: Supplied with or without support pin. With this item it is possible to use thickness 1,5 and 2 mm guides, by rotating for 90° the central plate: Part.353, 354, 377, 418, 419, 420, 446, 469, 485.
BOX QUANTITY: 24 pieces.
ON REQUEST:
- **Clamps:** In reinforced polypropylene, other colours.
- **Box quantity:** According to your request.

Guide rail clamp (for rectangular rails) Part. 289

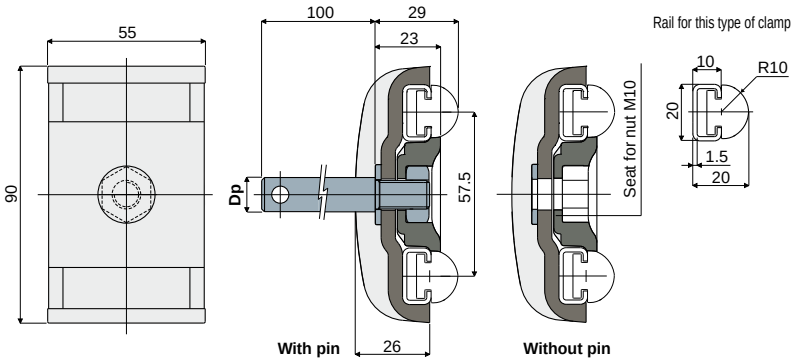

Dp Pin diameter (mm)	With pin Code	Without pin Code
12	289 / 82569	
14	289 / 82570	289 / 82572
16	289 / 82571	

MATERIALS: Clamp made of reinforced polyamide black colour; pin, nut and washer made of stainless steel AISI 304.
FEATURES: Supplied with or without support pin. To be used for the support of the product guide rail Part.373.
BOX QUANTITY: 24 pieces.
ON REQUEST:
- **Clamps:** In reinforced polypropylene, other colours.
- **Box quantity:** According to your request.

Guide rail clamp (for round rails) Part. 229

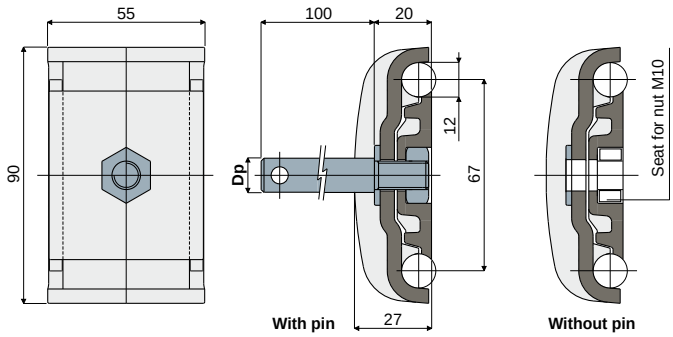

Dp Pin diameter (mm)	With pin Code	Without pin Code
12	229 / 80681	
14	229 / 80682	229 / 80609
16	229 / 80683	

MATERIALS: Clamp made of reinforced polyamide black colour; pin, nut and washer made of stainless steel AISI 304.
FEATURES: Supplied with or without support pin.
BOX QUANTITY: 24 pieces.
ON REQUEST:
- **Clamps:** In reinforced polypropylene, other colours.
- **Box quantity:** According to your request.

Guide rail clamps

Part. 231 Guide rail clamp
(for round rails)

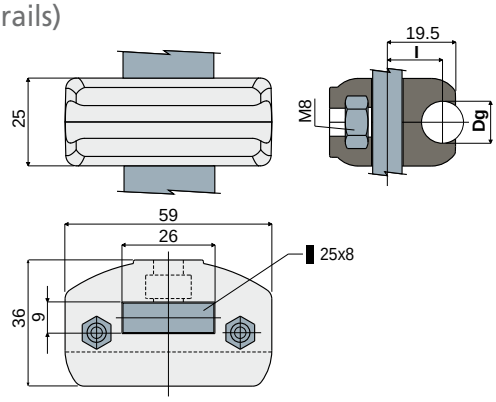

Example of application

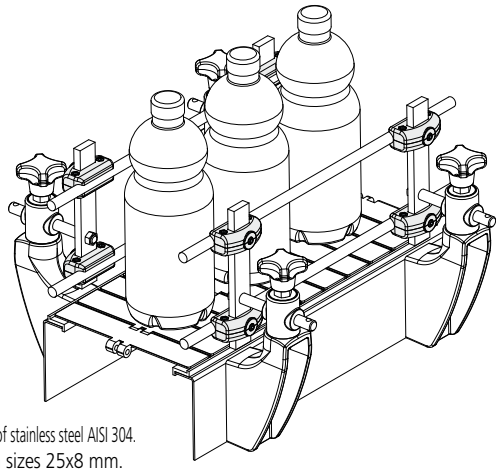

Dg Rail diameter (mm)	l (mm)	Code
8	16	231 / 80749
10	15	231 / 80788
12	15	231 / 80687
14	15	231 / 80787

MATERIALS: Clamp made of reinforced polyamide black colour; bolts and nuts made of stainless steel AISI 304.
FEATURES: Supplied assembled. To be used with flat support with sizes 25x8 mm.
BOX QUANTITY: 24 pieces.
ON REQUEST:
- Clamps: In reinforced polypropylene, other colours.
- Box quantity: According to your request.

Part. 232 Guide rail clamp
(for trapezoidal rails)

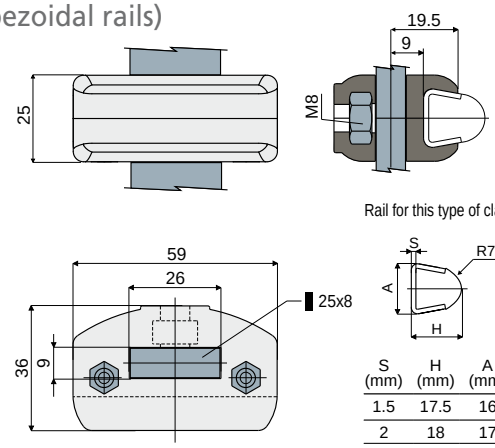

S (mm)	H (mm)	A (mm)
1.5	17.5	16
2	18	17

Example of application

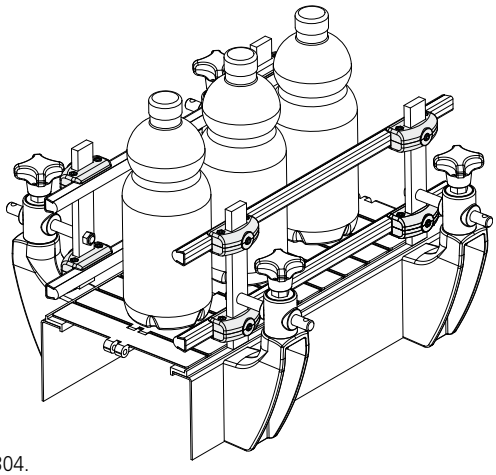

Code
232 / 80688

MATERIALS: Clamp made of reinforced polyamide black colour; bolts and nuts made of stainless steel AISI 304.
FEATURES: Supplied assembled. To be used with flat support with sizes 25x8 mm. With this item it is possible to use thickness 1,5 and 2 mm guides: Part.353, 354, 377, 418, 419, 420, 446, 469, 485.
BOX QUANTITY: 24 pieces.
ON REQUEST:
- Clamps: In reinforced polypropylene, other colours.
- Box quantity: According to your request.

Part. 291 Guide rail clamp
(for rectangular rails)

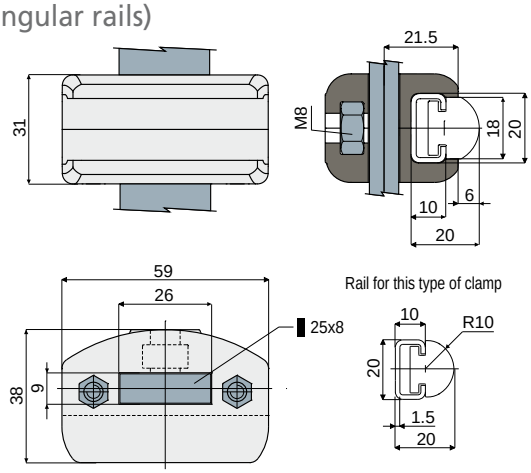

Example of application

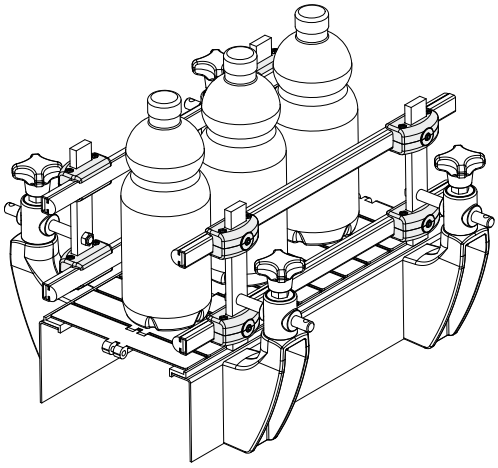

Code
291 / 82578

MATERIALS: Clamp made of reinforced polyamide black colour; bolts and nuts made of stainless steel AISI 304.
FEATURES: Supplied assembled. To be used with flat profile with sizes 25x8 mm. To be used for the support of the product guide rail Part.373.
BOX QUANTITY: 24 pieces.
ON REQUEST:
- Clamps: In reinforced polypropylene, other colours.
- Box quantity: According to your request.

Guide rail clamps

Guide rail clamp (for round rails) Part. 483

NEW

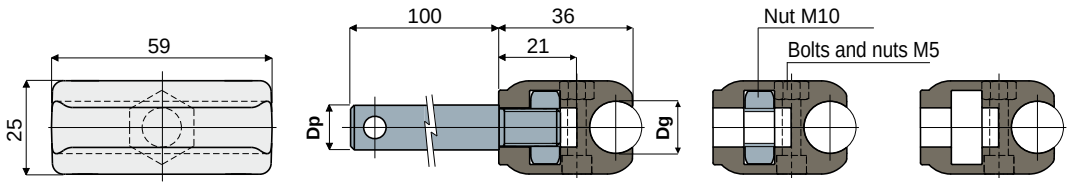

With pin with bolts and nuts | Without pin with bolts and nuts | Without pin, bolts and nuts

Dp Pin diameter (mm)	Dg Rail diameter (mm)	With pin with bolts and nuts Code
12	8	483 / 87024
	10	483 / 87025
	12	483 / 87026
	14	483 / 87027
14	8	483 / 87028
	10	483 / 87029
	12	483 / 87030
	14	483 / 87031
16	8	483 / 87032
	10	483 / 87033
	12	483 / 87034
	14	483 / 87035

Dg Rail diameter (mm)	Without pin with bolts and nuts Code
8	483 / 86156
10	483 / 86151
12	483 / 86152
14	483 / 86153

Dg Rail diameter (mm)	Without pin, bolts and nuts Code
8	483 / 87036
10	483 / 87037
12	483 / 87038
14	483 / 87039

MATERIALS: Clamp made of reinforced polyamide black colour; pin, bolts and nuts made of stainless steel AISI 304.
FEATURES: Supplied with or without support pin and with or without bolts and nuts.
BOX QUANTITY: 24 pieces.
ON REQUEST:
- Clamps: In reinforced polypropylene, other colours.
- Box quantity: According to your request.

Guide rail clamp (for trapezoidal rails) Part. 484

NEW

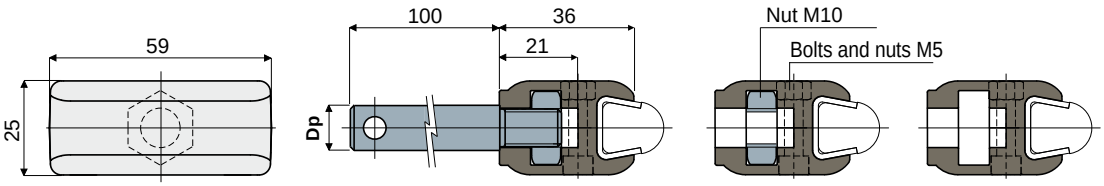

With pin with bolts and nuts | Without pin with bolts and nuts | Without pin, bolts and nuts

Rail for this type of clamp

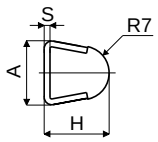

S (mm)	H (mm)	A (mm)
1.5	17.5	16
2	18	17

Dp Pin diameter (mm)	With pin with bolts and nuts Code	Without pin with bolts and nuts Code	Without pin, bolts and nuts Code
12	484 / 87040		
14	484 / 87041	484 / 86154	483 / 87043
16	484 / 87042		

MATERIALS: Clamp made of reinforced polyamide black colour; pin, bolts and nuts made of stainless steel AISI 304.
FEATURES: Supplied with or without support pin and with or without bolts and nuts. With this item it is possible to use thickness 1,5 and 2 mm guides: Part.353, 354 377, 418, 419, 420, 446, 469, 485.
BOX QUANTITY: 24 pieces.
ON REQUEST:
- Clamps: In reinforced polypropylene, other colours.
- Box quantity: According to your request.

Guide rail clamps

Part. 346 Guide rail clamp
(for round rails)

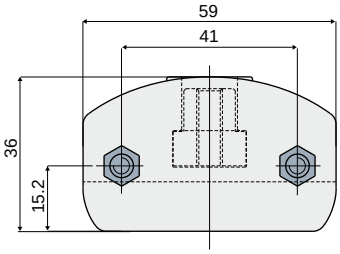

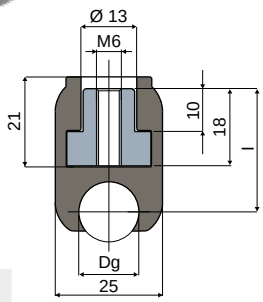

Dg Rail diameter (mm)	l (mm)	Code
8	30	346 / 83390
10	29.5	346 / 83391
12	29.5	346 / 83392
14	28.7	346 / 83393

MATERIALS: Clamp made of reinforced polyamide black colour; threaded insert in nickel plated brass; bolts and nuts in stainless steel AISI 304.

FEATURES: Designed appositely to be assembled directly on the pneumatic cylinder for the rails regulation. Supplied assembled.

BOX QUANTITY: 24 pieces.

ON REQUEST:

- Clamps: In reinforced polypropylene, other colours.
- Box quantity: According to your request.

Example of application

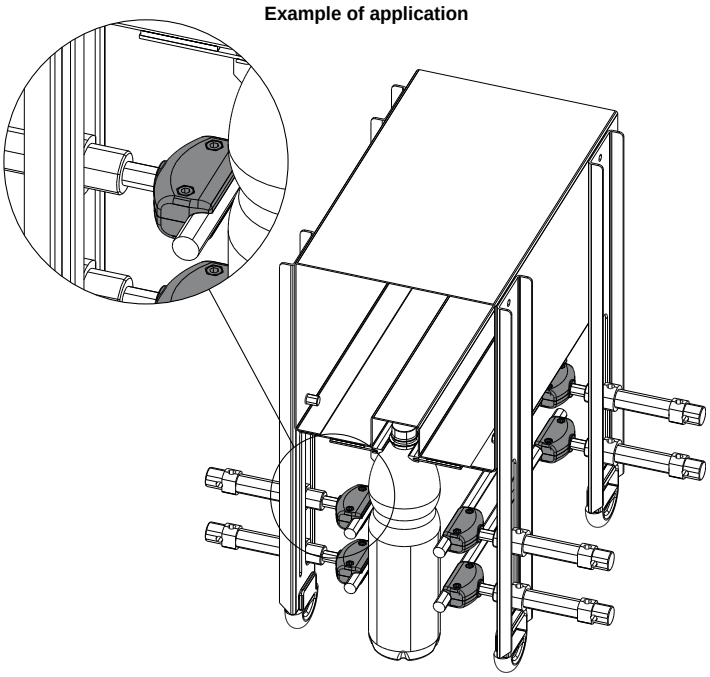

Part. 347 Guide rail clamp
(for trapezoidal rails)

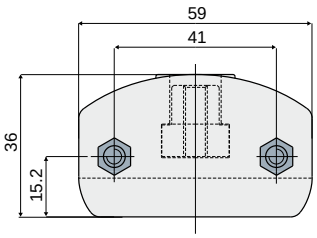

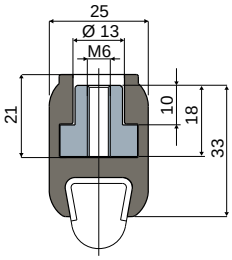

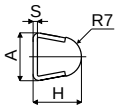

S (mm)	H (mm)	A (mm)
1.5	17.5	16
2	18	17

Code
347 / 83394

MATERIALS: Clamp made of reinforced polyamide black colour; threaded insert in nickel plated brass; bolts and nuts in stainless steel AISI 304.

FEATURES: Designed appositely to be assembled directly on the pneumatic cylinder for the rails regulation. With this item it is possible to use thickness 1,5 and 2 mm guides: Part.353, 354, 377, 418, 419, 420, 446, 469, 485. Supplied assembled.

BOX QUANTITY: 24 pieces.

ON REQUEST:

- Clamps: In reinforced polypropylene, other colours.
- Box quantity: According to your request.

Example of application

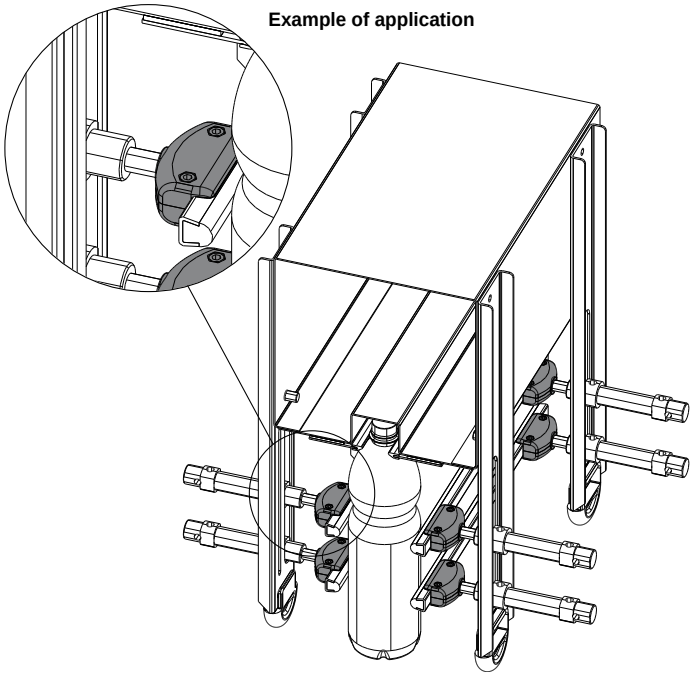

Guide rail clamps

Example of application

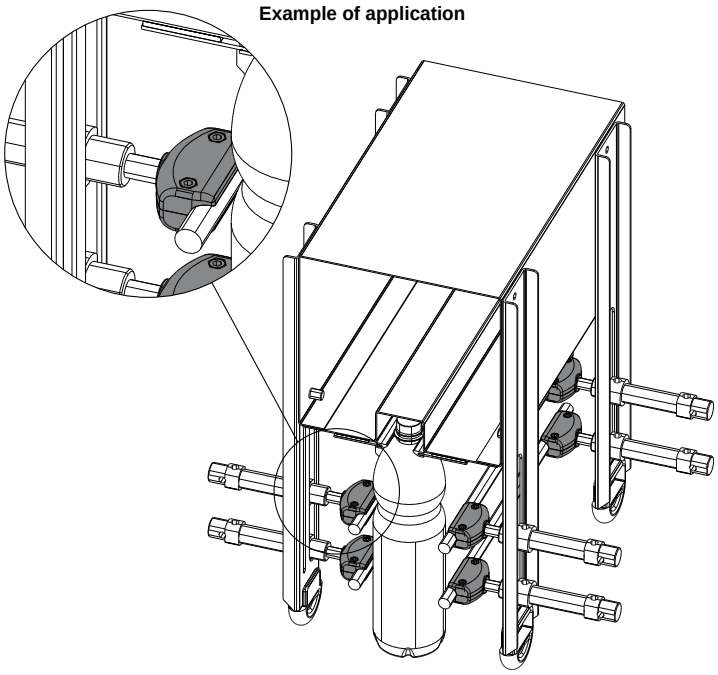

Guide rail clamp
(for round rails)

Part. **348**

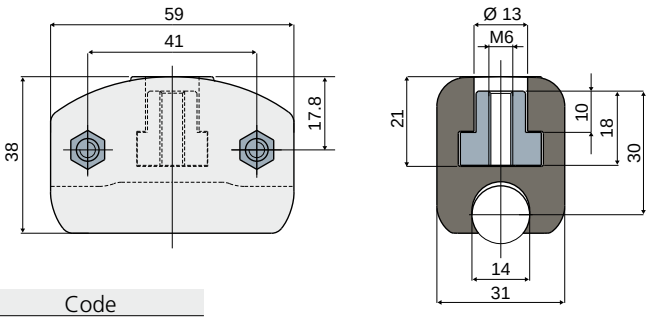

Code
348 / 83395

MATERIALS: Clamp made of reinforced polyamide black colour; threaded insert in nickel plated brass; bolts and nuts in stainless steel AISI 304.

FEATURES: Designed appositely to be assembled directly on the pneumatic cylinder for the rails regulation. Supplied assembled.

BOX QUANTITY: 24 pieces.

ON REQUEST:

- **Clamps:** In reinforced polypropylene, other colours.
- **Box quantity:** According to your request.

Example of application

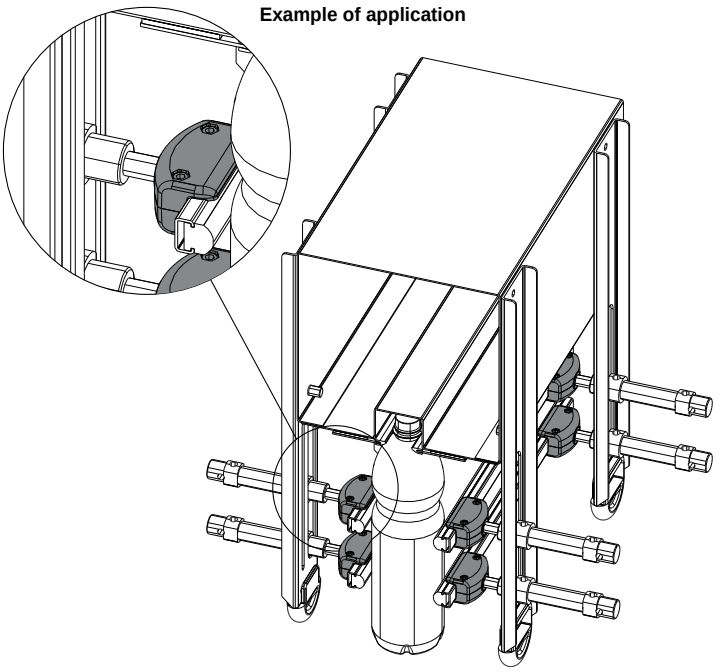

Guide rail clamp
(for rectangular rails)

Part. **349**

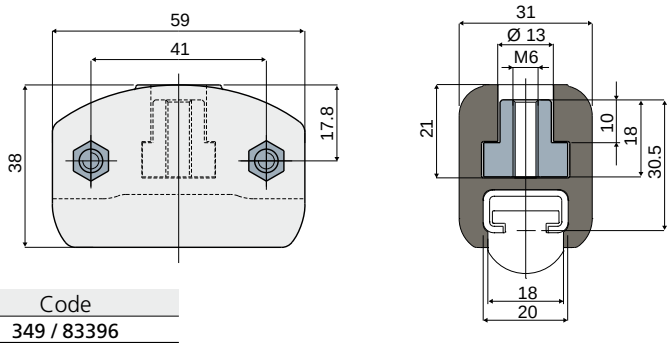

Code
349 / 83396

MATERIALS: Clamp made of reinforced polyamide black colour; threaded insert in nickel plated brass; bolts and nuts in stainless steel AISI 304.

FEATURES: Designed appositely to be assembled directly on the pneumatic cylinder for the rails regulation. To be used for the support of the product guide rail Part.373. Supplied assembled.

BOX QUANTITY: 24 pieces.

ON REQUEST:

- **Clamps:** In reinforced polypropylene, other colours.
- **Box quantity:** According to your request.

Guide rail clamps

Part. 290 Guide rail clamp
(for rectangular rail)

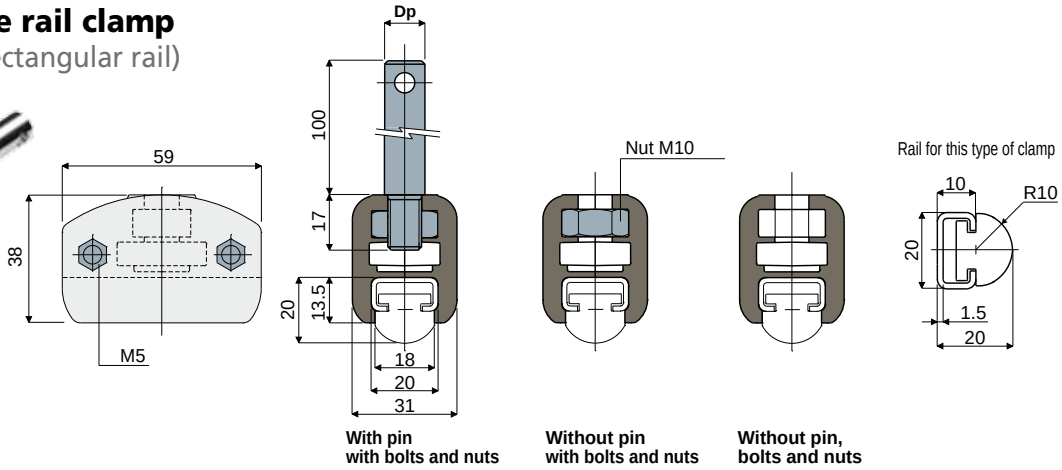

Dp Pin diameter (mm)	With pin with bolts and nuts	Without pin with bolts and nuts	Without pin, bolts and nuts
	Code	Code	Code
12	290 / 82573		
14	290 / 82574	290 / 82576	290 / 82577
16	290 / 82575		

MATERIALS: Clamp made of reinforced polyamide black colour; pin, bolts and nuts made of stainless steel AISI 304.
FEATURES: Supplied with or without support pin. To be used for the support of the product guide rail Part.373.
BOX QUANTITY: 24 pieces.
ON REQUEST:
- **Clamps:** In reinforced polypropylene, other colours.
- **Box quantity:** According to your request.

Part. 301 Threaded pin

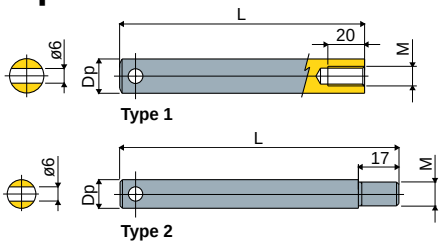

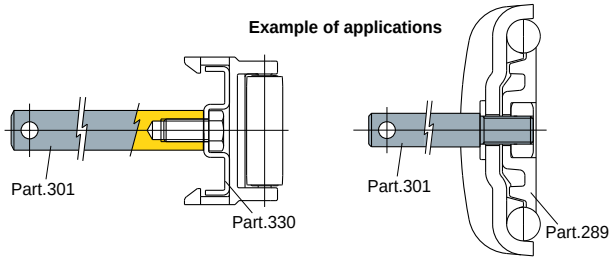

Dp (mm)	L (mm)	M (mm)	Type 1 Code
12	100	M8	301 / 86707
14	100	M8	301 / 82751
16	100	M8	301 / 86708

Dp (mm)	L (mm)	M (mm)	Type 2 Code
12	117	M10	301 / 83304
12	150	M8	301 / 85381
12	167	M10	301 / 84869 NEW
12	217	M10	301 / 83871
14	117	M10	301 / 83305
16	117	M10	301 / 83306
16	121	M10	301 / 84109

MATERIALS: Pin made of stainless steel AISI 304.
FEATURES:
- **Type 1:** Can be mounted both on guide rail clamps or on side guides;
- **Type 2:** Used for the mounting of Part. 289, 229, 230, 290, 204, 205.

BOX QUANTITY: 24 pieces.
ON REQUEST:
- **Pins:** In various lengths.
- **Box quantity:** According to your request.

Part. 460 Threaded pin for guide rail clamp

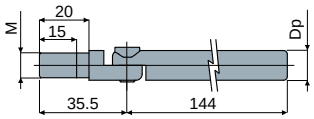

Example of application

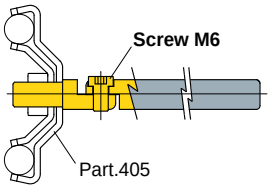

Example of application

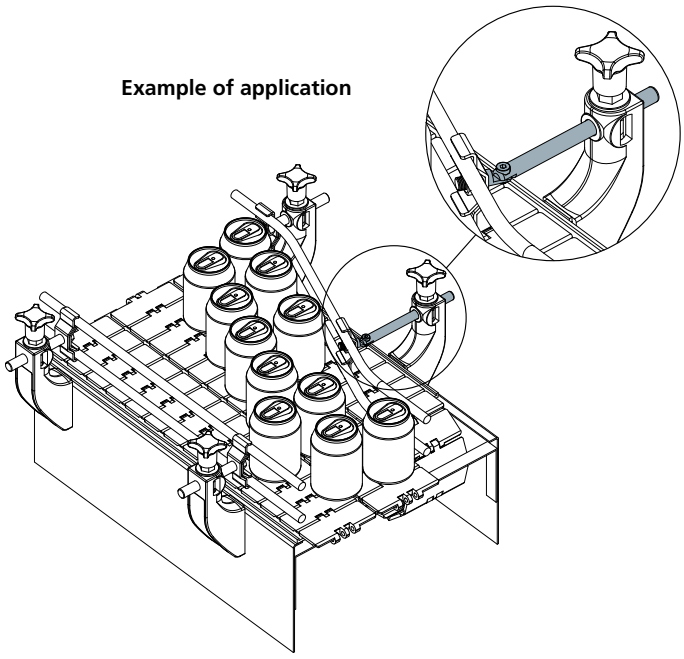

Dp (mm)	M (mm)	Code
12	M10	460 / 85470
14	M10	460 / 85566

MATERIALS: Pin made of stainless steel AISI 304.
FEATURES: Supplied complete with bolts and nuts.
BOX QUANTITY: 24 pieces.
ON REQUEST:
- **Pins:** In various lengths.
- **Box quantity:** According to your request.

Guide rail clamps

Cap for pins

Part. **398**

Dp (mm)	H (mm)	L (mm)	Code
12	17	21	**398 / 84258**
14	18	23	**398 / 84259**
16	20	25	**398 / 85592**

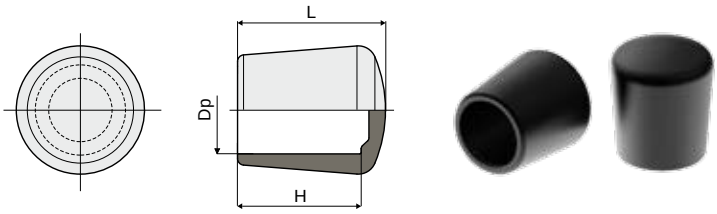

MATERIALS: Cap made of thermoplastic rubber.
FEATURES: To be applied at the ends of the pins.
BOX QUANTITY: 24 pieces.
ON REQUEST:
- **Box quantity:** According to your request.

Guide rail clamp (for round rails)

Part. **204**

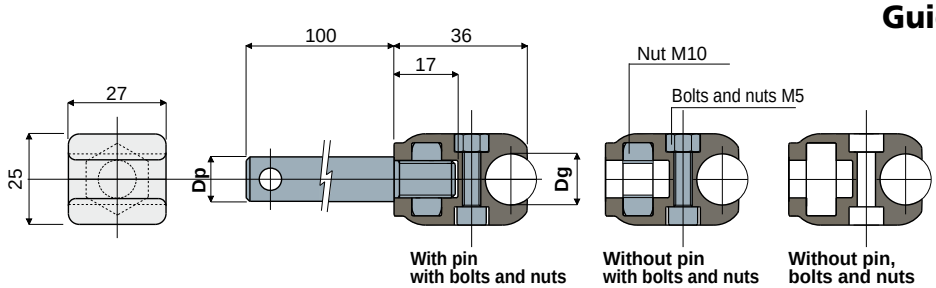

Dp Pin diameter (mm)	Dg Rail diameter (mm)	With pin with bolts and nuts Code
12	8	**204 / 80798**
	10	**204 / 80799**
	12	**204 / 80800**
	14	**204 / 80801**
14	8	**204 / 80802**
	10	**204 / 80803**
	12	**204 / 80804**
	14	**204 / 80805**
16	8	**204 / 80806**
	10	**204 / 80807**
	12	**204 / 80808**
	14	**204 / 80809**

Dg Rail diameter (mm)	Without pin with bolts and nuts Code
8	**204 / 80810**
10	**204 / 80811**
12	**204 / 80812**
14	**204 / 80813**

Dg Rail diameter (mm)	Without pin, bolts and nuts Code
8	**204 / 80978**
10	**204 / 80979**
12	**204 / 80980**
14	**204 / 80981**

MATERIALS: Clamp made of reinforced polyamide black colour; pin, bolts and nuts made of stainless steel AISI 304.
FEATURES: Supplied with or without support pin and with or without bolts and nuts.
BOX QUANTITY: 24 pieces.
ON REQUEST:
- **Clamps:** In reinforced polypropylene, other colours.
- **Box quantity:** According to your request.

Guide rail clamp (for trapezoidal rails)

Part. **205**

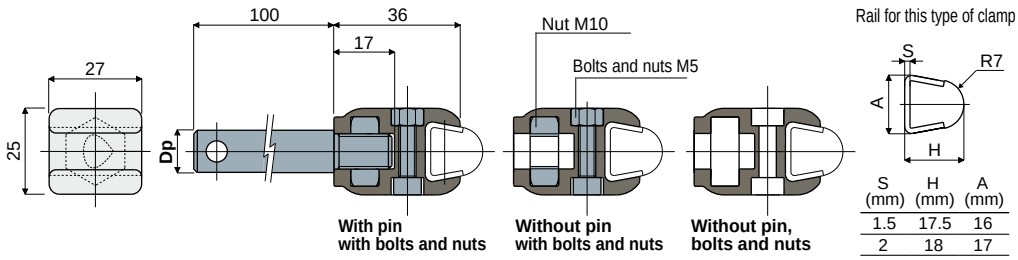

S (mm)	H (mm)	A (mm)
1.5	17.5	16
2	18	17

Dp Pin diameter (mm)	With pin with bolts and nuts Code	Without pin with bolts and nuts Code	Without pin, bolts and nuts Code
12	**205 / 80814**		
14	**205 / 80815**	**205 / 80817**	**205 / 80982**
16	**205 / 80816**		

MATERIALS: Clamp made of reinforced polyamide black colour; pin, bolts and nuts made of stainless steel AISI 304.
FEATURES: Supplied with or without support pin and with or without bolts and nuts. With this item it is possible to use thickness 1,5 and 2 mm guides: Part.353, 354, 377, 418, 419, 420, 446, 469, 485.
BOX QUANTITY: 24 pieces.
ON REQUEST:
- **Clamps:** In reinforced polypropylene, other colours.
- **Box quantity:** According to your request.

Guide rail clamps

Part. 412 Guide rail clamp

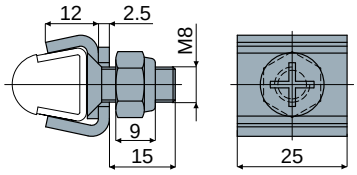

Example of application

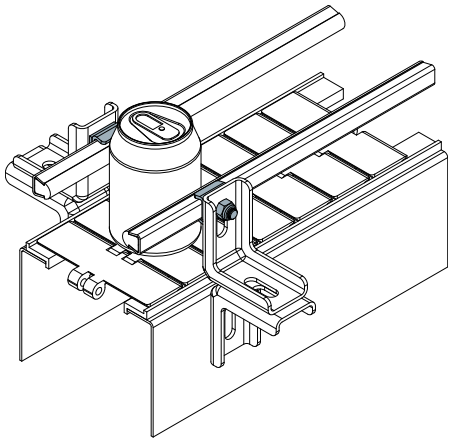

Code
412 / 84487

MATERIALS: Clamp, bolts and nuts made of stainless steel AISI 304.
FEATURES: With this item it is possible to use thickness 1,5 and 2 mm guides: Part.353, 354, 377, 418, 419, 420, 446, 469, 485.
BOX QUANTITY: 24 pieces.
ON REQUEST:

- Box quantity: According to your request.
- Assembly of: Bolts and nuts.

Part. 413 Guide rail clamp
(for connection)

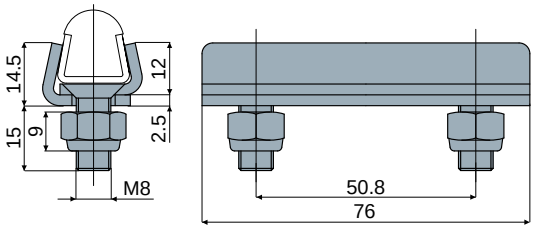

Example of application

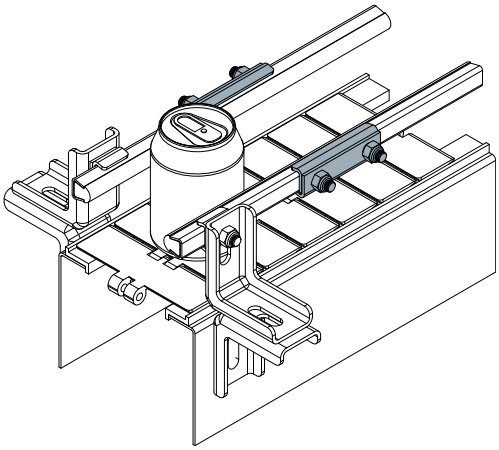

Code
413 / 84488

MATERIALS: Clamp, bolts and nuts made of stainless steel AISI 304.
FEATURES: With this item it is possible to use thickness 1,5 and 2 mm guides: Part.353, 354, 377, 418, 419, 420, 446, 469, 485.
BOX QUANTITY: 24 pieces.
ON REQUEST:

- Box quantity: According to your request.
- Assembly of: Bolts and nuts.

Guide rail clamps

Example of application

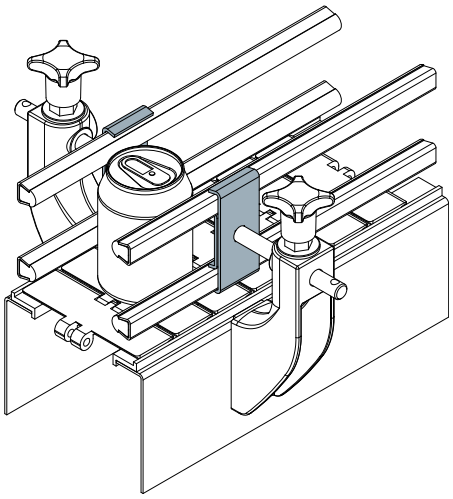

Guide rail clamp (double) Part. 410

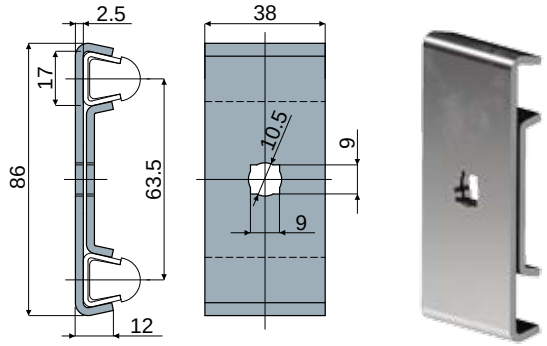

Code
410 / 84485

MATERIALS: Clamp made of stainless steel AISI 304.
FEATURES: With this item it is possible to use thickness 1,5 and 2 mm guides: Part.353, 354, 377, 418, 419, 420, 446, 469, 485.
BOX QUANTITY: 24 pieces.
ON REQUEST:

- Box quantity: According to your request.

Example of application

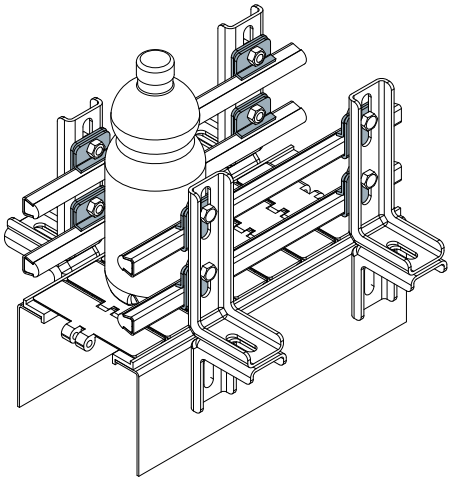

Guide rail clamp Part. 411

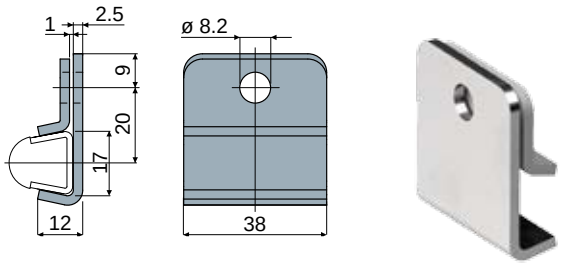

Code
411 / 84486

MATERIALS: Clamp made of stainless steel AISI 304.
FEATURES: With this item it is possible to use thickness 1,5 and 2 mm guides: Part.353, 354, 377, 418, 419, 420, 446, 469, 485.
BOX QUANTITY: 24 pieces.
ON REQUEST:

- Box quantity: According to your request.

Guide rail clamps

Part. 405 Guide rail clamp
(for round rails)

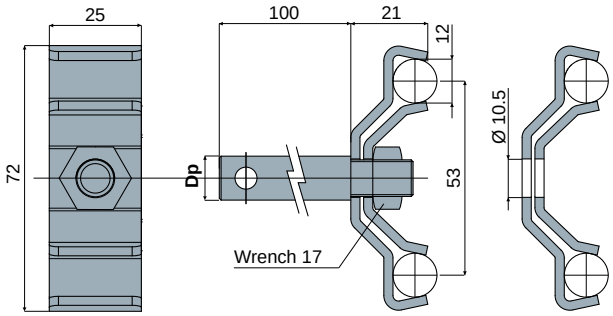

With pin Without pin

Dp Pin diameter (mm)	With pin Code	Without pin Code
12	405 / 84327	
14	405 / 84442	405 / 85101
16	405 / 84443	

MATERIALS: Clamp, mounting plate, nut and threaded pin made of stainless steel AISI 304.
FEATURES: Supplied with or without pin.
BOX QUANTITY: 24 pieces.
ON REQUEST:
- Box quantity: According to your request.
- Assembly of: Bolts and nuts.

Example of application

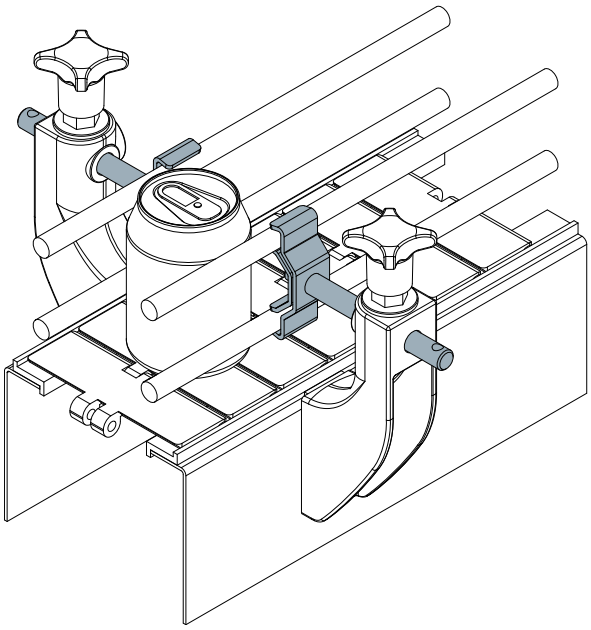

Part. 424 Guide rail clamp

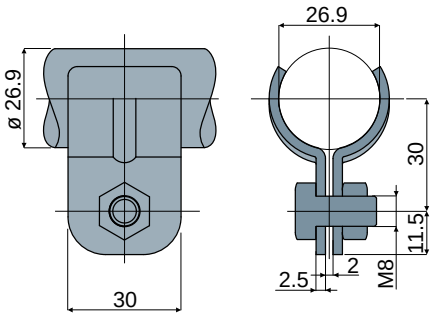

Code
424 / 84961

MATERIALS: Clamp, bolts and nuts in stainless steel AISI 304.
BOX QUANTITY: 24 pieces.
ON REQUEST:
- Box quantity: According to your request.
- Assembly of: Bolts and nuts.

Example of application

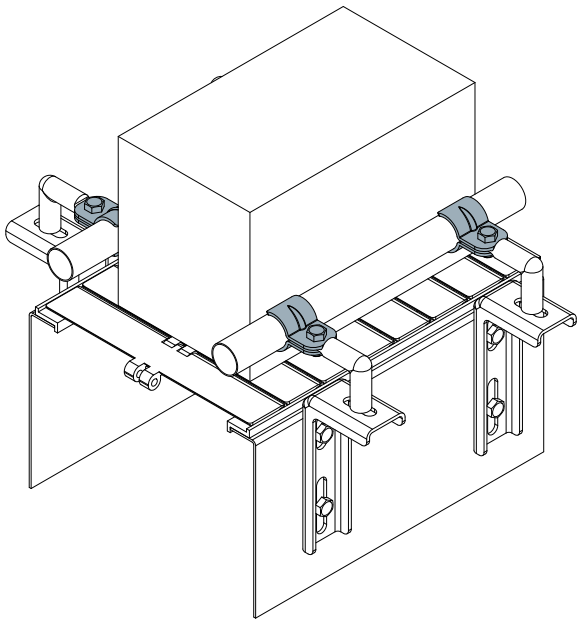

Guide rail clamps

Example of application

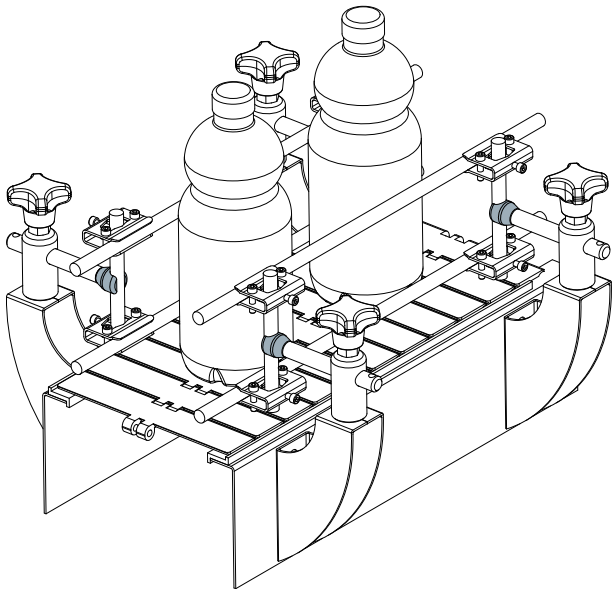

Guide rail clamp Part. 443

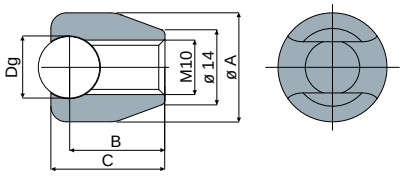

Dg Rail diameter (mm)	Code	Ø A (mm)	B (mm)	C (mm)
12	**443 / 85275**	21	18.5	22

MATERIALS: Clamp made of stainless steel AISI 304.
BOX QUANTITY: 24 pieces.
ON REQUEST:
- **Box quantity:** According to your request.

Example of application

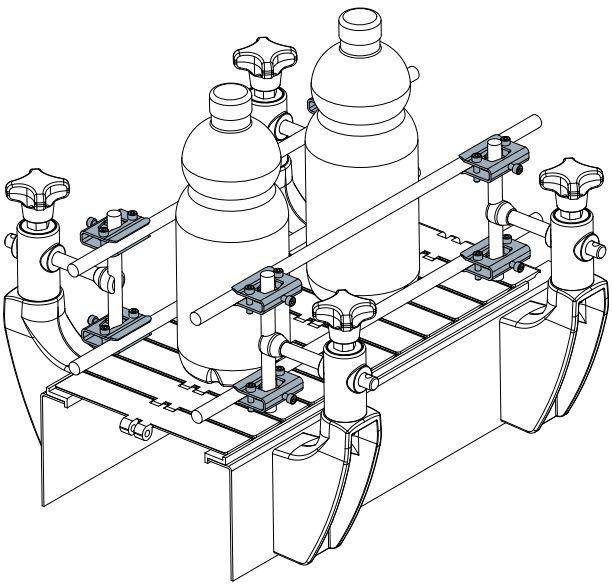

Guide rail clamp (for round rails) Part. 440

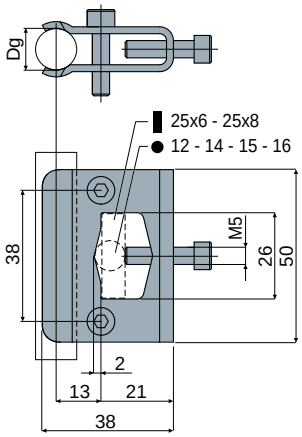

Dg Rail diameter (mm)	Code
12	**440 / 85240**

MATERIALS: Clamp, bolts and nuts in stainless steel AISI 304.
FEATURES: Supplied with bolts and nuts.
BOX QUANTITY: 24 pieces.
ON REQUEST:
- **Box quantity:** According to your request.

Guide rail clamps

Part. 439 Guide rail clamp
(for trapezoidal rails)

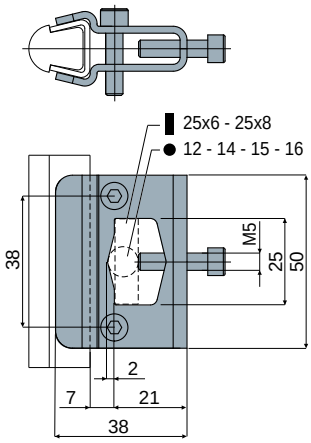

Example of application

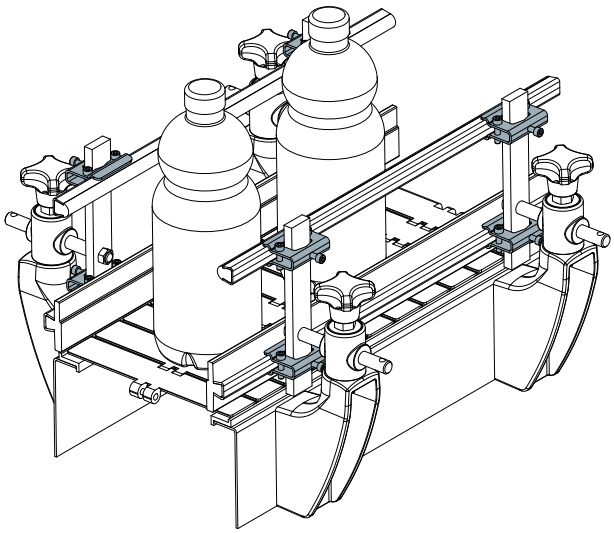

Code
439 / 85239

MATERIALS: Clamp, bolts and nuts in stainless steel AISI 304.
FEATURES: With this item it is possible to use thickness 1,5 and 2 mm guides: Part.353, 354, 377, 418, 419, 420, 446, 469, 485. Supplied with bolts and nuts.
BOX QUANTITY: 24 pieces.
ON REQUEST:
- **Box quantity:** According to your request.

Part. 470 Cross clamp

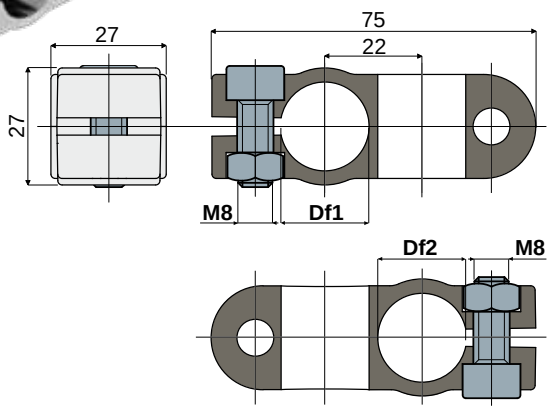

Example of application

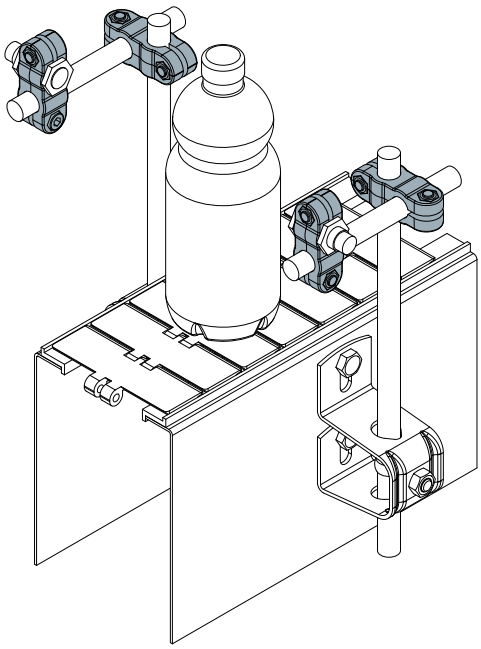

Bore for pin of		Version with bolts and nuts	Version without bolts and nuts
Df1 round	Df2 round		
(mm)	(mm)	Code	Code
16	16	470 / 85598	470 / 86710
16	20	470 / 85599	470 / 86711
20	20	470 / 85600	470 / 86712

MATERIALS: Clamp, bolts and nuts in stainless steel AISI 304.
BOX QUANTITY: 24 pieces.
ON REQUEST:
- **Box quantity:** According to your request.

Guide rail clamps

Guide rail clamp

Part. **427**

Example of application

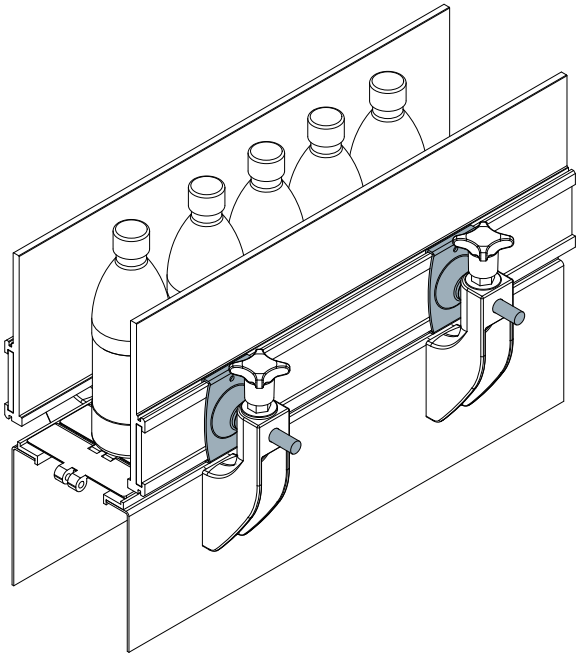

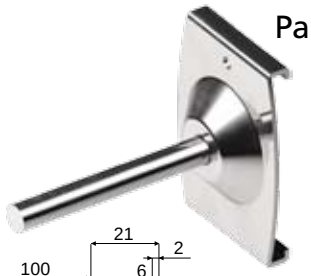

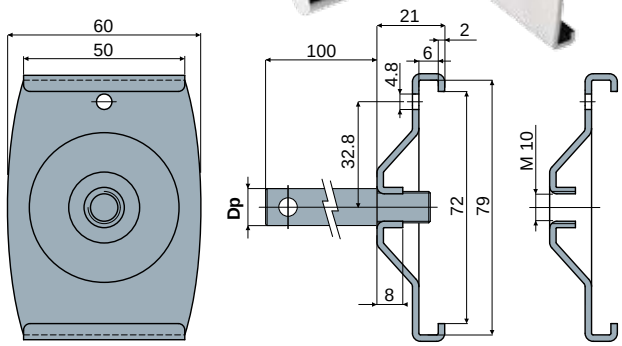

With pin — Without pin

Dp Pin diameter (mm)	With pin Code	Without pin Code
12	427 / 85097	
14	427 / 85098	427 / 85009
16	427 / 85099	

MATERIALS: Clamp and pin in stainless steel AISI 304.
FEATURES: Supplied with or without pin. To be used with side guides Part. 425, 426, 463.
BOX QUANTITY: 24 pieces.
ON REQUEST:
- Assembling of: Pins.
- Box quantity: According to your request.

Guide rail clamp

Part. **434**

Example of application

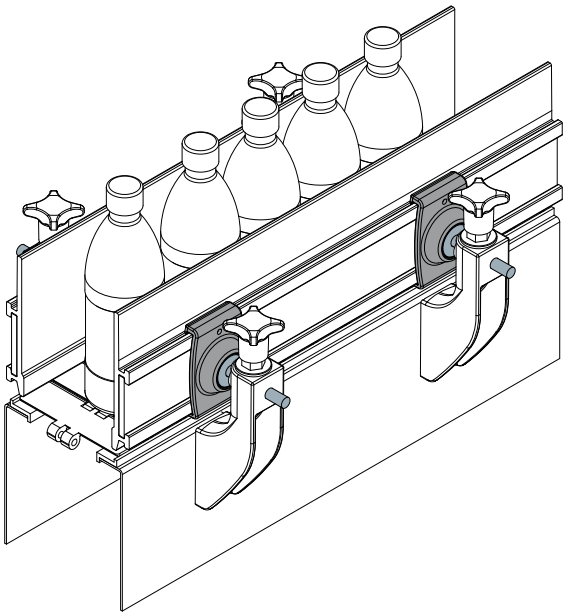

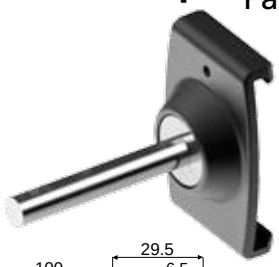

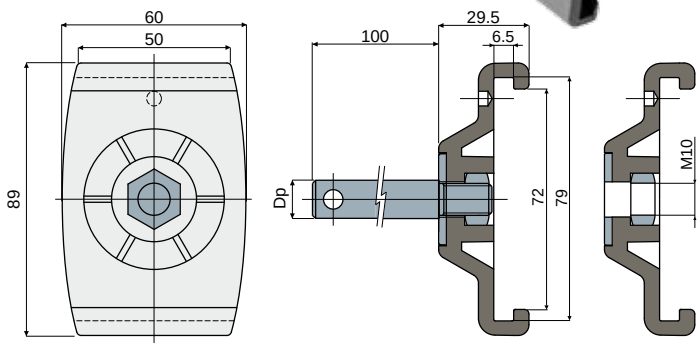

With pin — Without pin

Dp Pin diameter (mm)	With pin Code	Without pin Code
12	434 / 85093	
14	434 / 85094	434 / 85100
16	434 / 85095	

MATERIALS: Clamp is made of reinforced polyamide; threaded pin, washer and nut in stainless steel AISI 304.
FEATURES: Supplied with or without pin. To be used with side guides Part. 425, 426, 463.
BOX QUANTITY: 8 pieces.
ON REQUEST:
- Assembling of: Pins, washers and nuts.
- Box quantity: According to your request.

Clamps

Part. 206 Clamp support for photocells

(for photocells and reflectors)

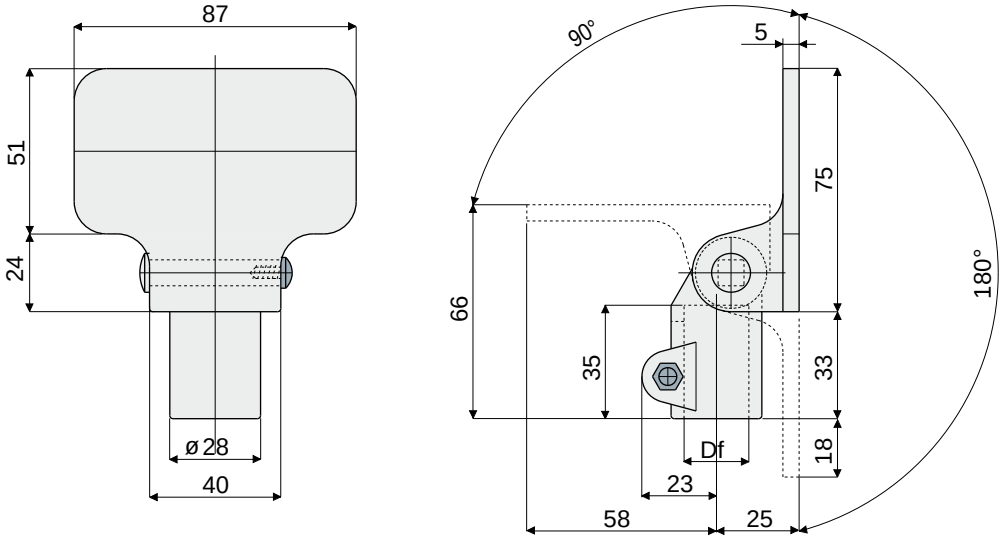

Df Bore for pin of (mm)	Code
12	206 / 82010 (can be used also with square pins 10x10)
14	206 / 80818
15	206 / 80819
16	206 / 80820
18	206 / 80821
20	206 / 80822

MATERIALS: Clamp made of reinforced polyamide black colour; bolts and nuts made of stainless steel AISI 304.
FEATURES: Possibility of assembly in various positions.
BOX QUANTITY: 24 pieces.
ON REQUEST:

- Clamps: In reinforced polypropylene, other colours.
- Box quantity: According to your request.

Clamps

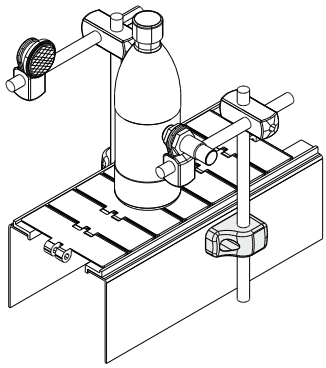

With blocking pin
(Suitable to support photocells)

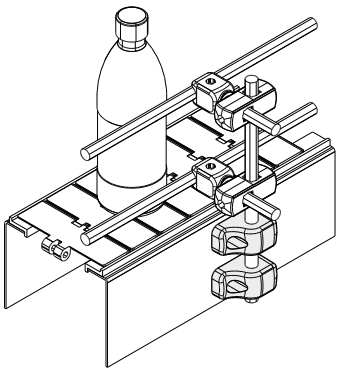

Without blocking pin
(Suitable to support guide)

Example of application

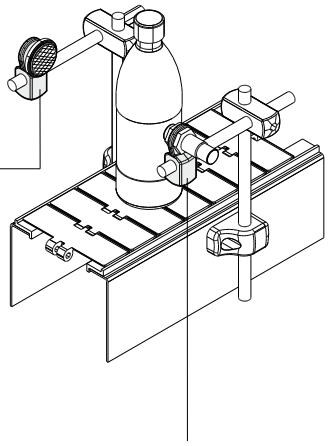

Type 1 (For photocells)

Clamp
(to support rails and photocells)

Part. **237**

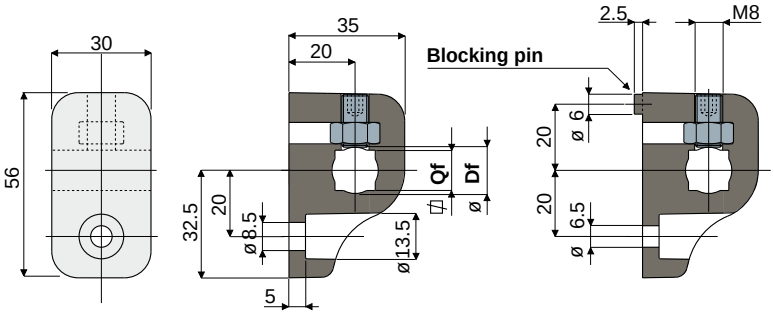

Without blocking pin **With blocking pin**

Bore for pin of Df round (mm)	Bore for pin of Qf square (mm)	Without blocking pin Code	With blocking pin Code
10	8	237 / 80958	237 / 80961
12	10	237 / 80959	237 / 80962
14	12	237 / 80960	237 / 80963

Clamp support for photocells
(for photocells and reflectors)

Part. **240**

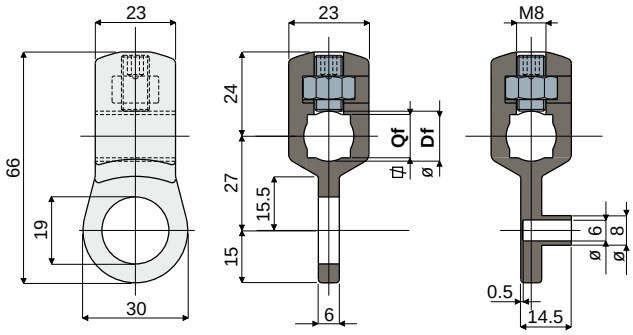

Type 1 (For photocells) **Type 2** (For reflectors)

Bore for pin of Df round (mm)	Bore for pin of Qf square (mm)	Type 1 (for photocells) Code	Type 2 (for reflectors) Code
10	8	240 / 80996	240 / 80997
12	10	240 / 80998	240 / 80999
14	12	240 / 81000	240 / 81001

MATERIALS: Clamp made of reinforced polyamide black colour; screw and nuts made of stainless steel AISI 304.

FEATURES: This part can be used with round and square pins either.

BOX QUANTITY: 24 pieces.

ON REQUEST:

- Clamps: In reinforced polypropylene, other colours.
- Box quantity: According to your request.

Clamps

Part. 238 "T" clamp
(to support rails and photocells)

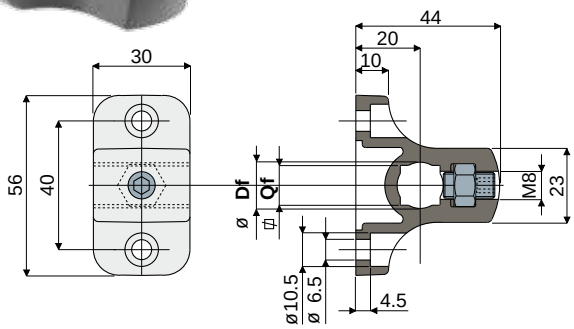

Bore for pin of		Code
Df round (mm)	Qf square (mm)	
10	8	238 / 80985
12	10	238 / 80986
14	12	238 / 80987

MATERIALS: Clamp made of reinforced polyamide black colour; screw and nuts made of stainless steel AISI 304.
FEATURES: This part can be used with round and square pins either.
BOX QUANTITY: 24 pieces.
ON REQUEST:
- Clamps: With different bores sizes, in reinforced polypropylene, other colours.
- Box quantity: According to your request.

Part. 324 Spacer for clamp
(for "T" clamp Part. 238)

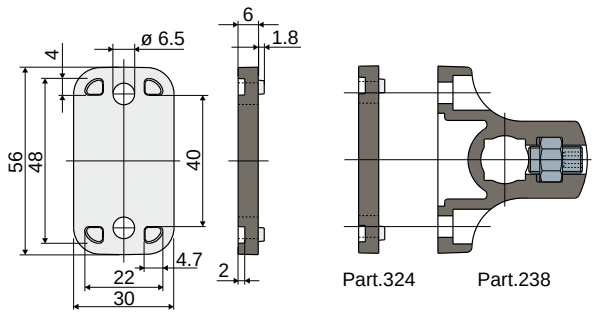

Code
324 / 82971

MATERIALS: Spacer made of reinforced polyamide black colour.
FEATURES: Accessory to be applied to "T" clamp Part.238.
BOX QUANTITY: 24 pieces.
ON REQUEST:
- Spacers: In reinforced polypropylene, other colours.
- Box quantity: According to your request.

Example of applications

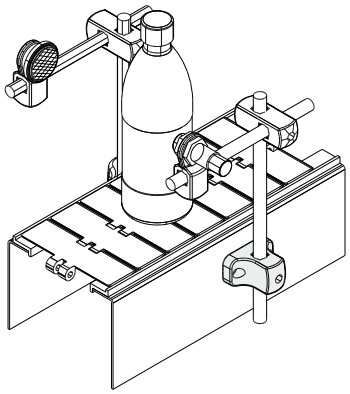

To support photocells

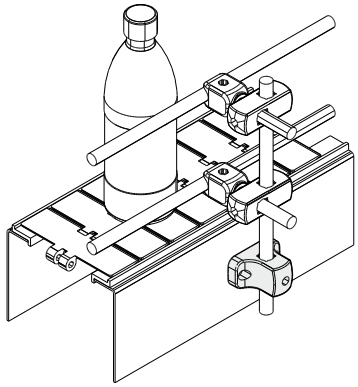

To support guide

Example of application

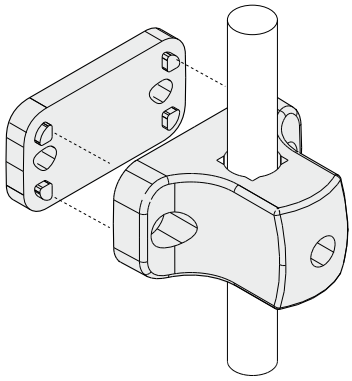

Clamps

Example of application

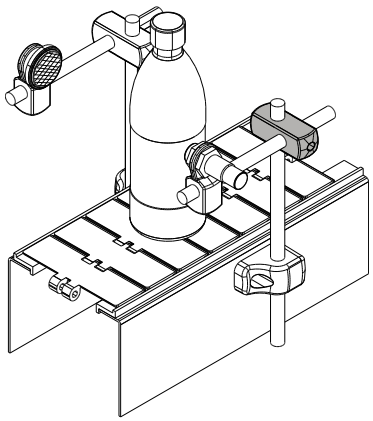

Cross clamp Part. 239

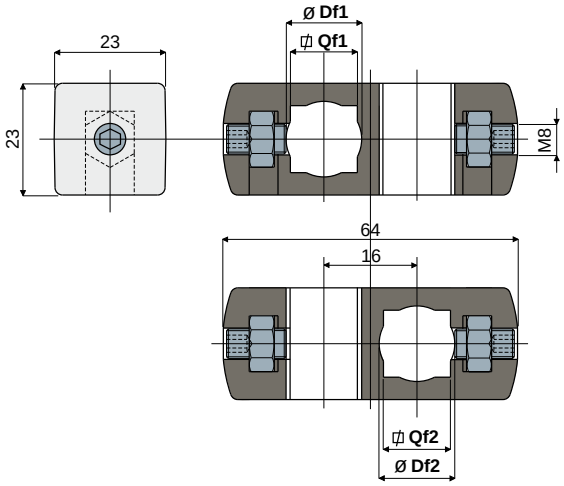

Bore for pin of		Bore for pin of		Code
Df1 round (mm)	Qf1 square (mm)	Df2 round (mm)	Qf2 square (mm)	
10	8	10	8	239 / 80993
12	10	12	10	239 / 80994
14	12	14	12	239 / 80995

MATERIALS: Clamp made of reinforced polyamide black colour; bolts and nuts made of stainless steel AISI 304.
FEATURES: This part can be used with round and square pins either.
BOX QUANTITY: 24 pieces.
ON REQUEST:
- Clamps: With different bores sizes, in reinforced polypropylene, other colours.
- Box quantity: According to your request.

Example of application

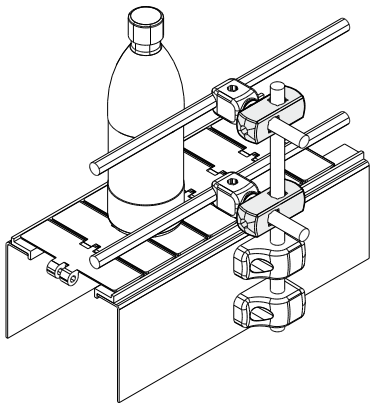

Cross clamp Part. 241

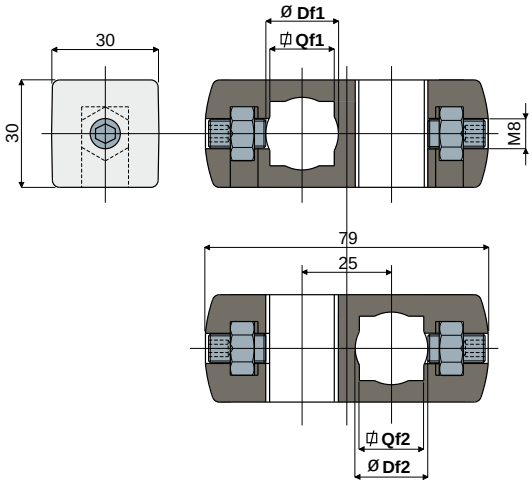

Bore for pin of		Bore for pin of		Code
Df1 round (mm)	Qf1 square (mm)	Df2 round (mm)	Qf2 square (mm)	
14	12	14	12	241 / 80988
15	-	15	-	241 / 80989
16	-	16	-	241 / 80990
18	-	18	-	241 / 80991
20	-	20	-	241 / 80992

MATERIALS: Clamp made of reinforced polyamide black colour; bolts and nuts made of stainless steel AISI 304.
FEATURES: This part can be used with round and square pins either, only in the version Df1 14.
BOX QUANTITY: 24 pieces.
ON REQUEST:
- Clamps: With different bores sizes, in reinforced polypropylene, other colours.
- Box quantity: According to your request.

Clamps

Part. 297 Cross block

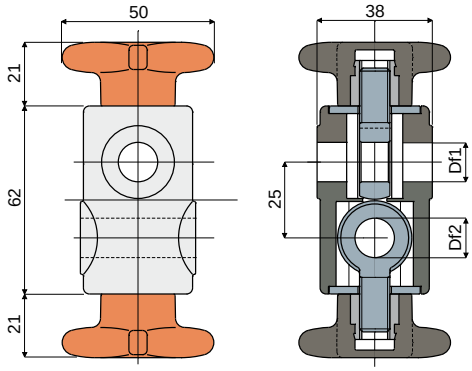

Df1 Bore for pin of (mm)	Df2 Bore for pin of (mm)	Code
12	12	297 / 82658

MATERIALS: Housing in reinforced polyamide black colour and knob in reinforced polyamide orange colour; eyebolts in stainless steel AISI 304; threaded insert in nickel plated brass.

FEATURES: To be used to support the rail-holder pins.

BOX QUANTITY: 24 pieces.

ON REQUEST:

- Housings and Knobs: in reinforced polypropylene, other colours.
- Box quantity: According to your request.

Example of application

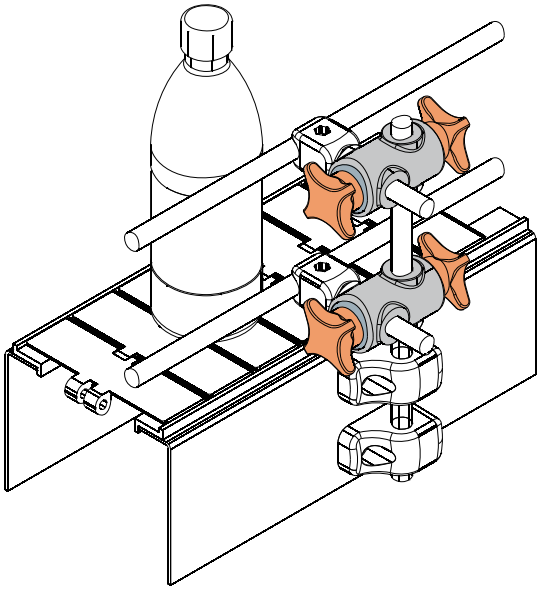

Part. 312 Cross block

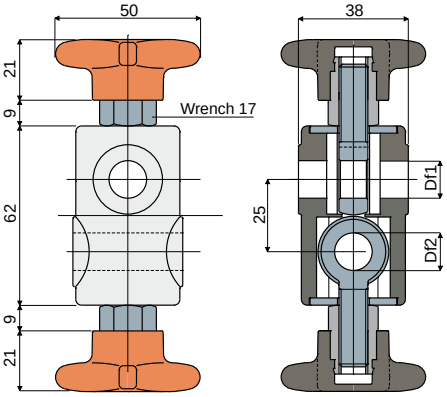

Df1 Bore for pin of (mm)	Df2 Bore for pin of (mm)	Code
12	12	312 / 82845
14	14	312 / 82846
16	16	312 / 82847

MATERIALS: Housing in reinforced polyamide black colour and knob in reinforced polyamide orange colour; eyebolts in stainless steel AISI 304; threaded insert in nickel plated brass.

FEATURES: To be used to support the rail-holder pins.

BOX QUANTITY: 24 pieces.

ON REQUEST:

- Housings and Knobs: in reinforced polypropylene, other colours.
- Box quantity: According to your request.

Example of application

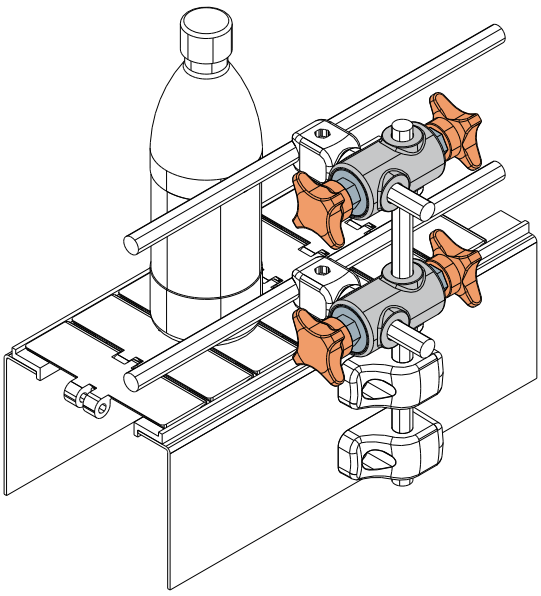

Clamps

Example of application

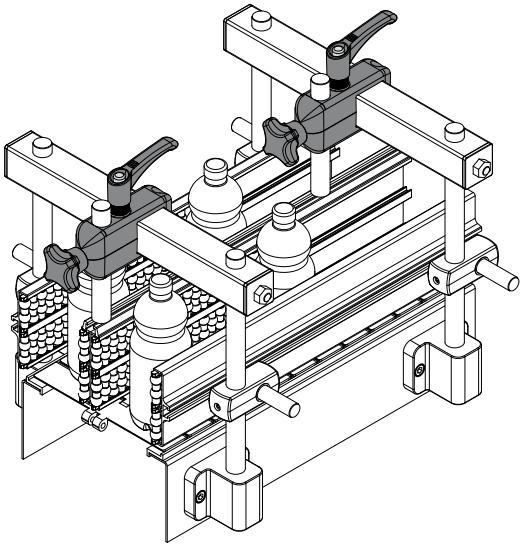

Cross clamp for central roller guides support

Part. **435**

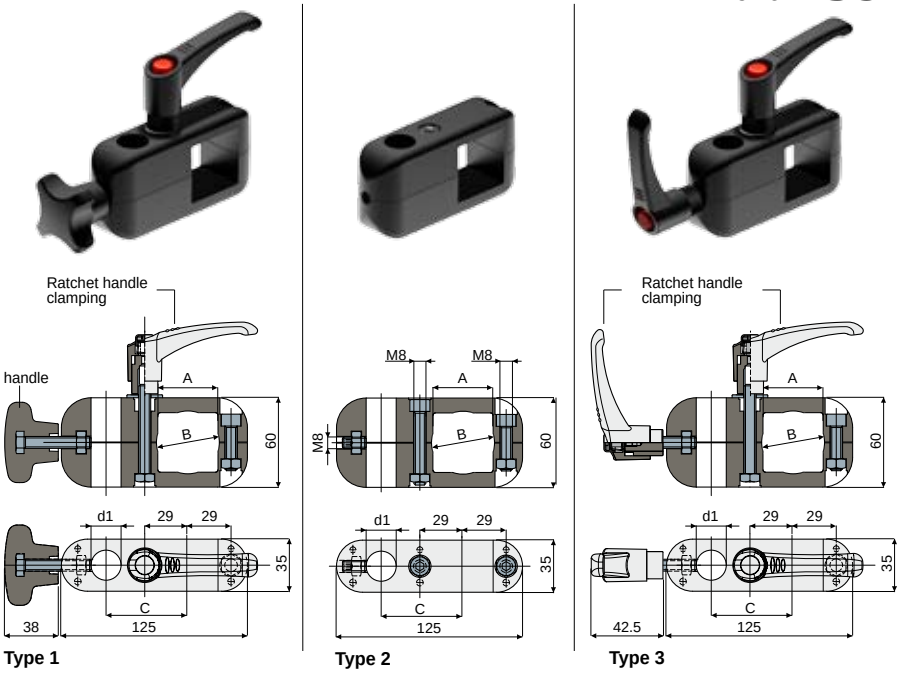

Square tube	Round tube		pin ø	Type 1	Type 2	Type 3
A	B	C	d1	Code	Code	Code
40	42,4	58	15-16	435 / 85166	435 / 85167	435 / 86692 NEW
		56	20	435 / 85168	435 / 85169	435 / 86691 NEW

MATERIALS: Clamp and handles are made of reinforced polyamide black colour; nuts, screws and washer in stainless steel AISI 304.
FEATURES: They are used to support the central rollers side guides.
BOX QUANTITY: 8 pieces.
ON REQUEST:
- Assembling of: Handles, bolts and nuts.
- Box quantity: According to your request.

Bushing for eyebolt

Part. **333**

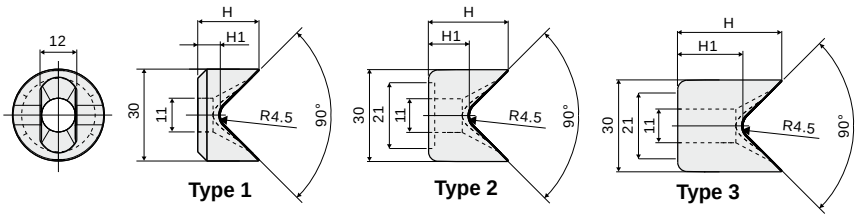

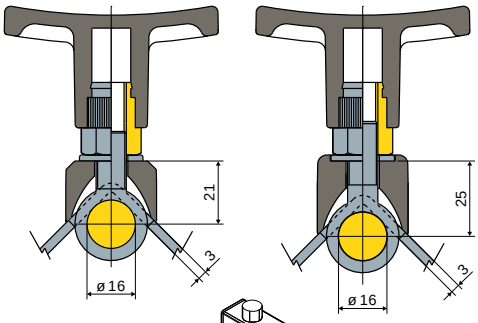

H (mm)	H1 (mm)	Type 1 Code
20	7,3	333 / 83117

H (mm)	H1 (mm)	Type 2 Code
26	13,3	333 / 83115

H (mm)	H1 (mm)	Type 3 Code
34	21,3	333 / 84025

MATERIALS: Bushing made of reinforced polyamide black colour.
FEATURES: To be used with the eyebolts to block the pins holding the transport guides.
BOX QUANTITY: 24 pieces.
ON REQUEST:
- Bushings: With different heights, in reinforced polypropylene, other colours.
- Box quantity: According to your request.

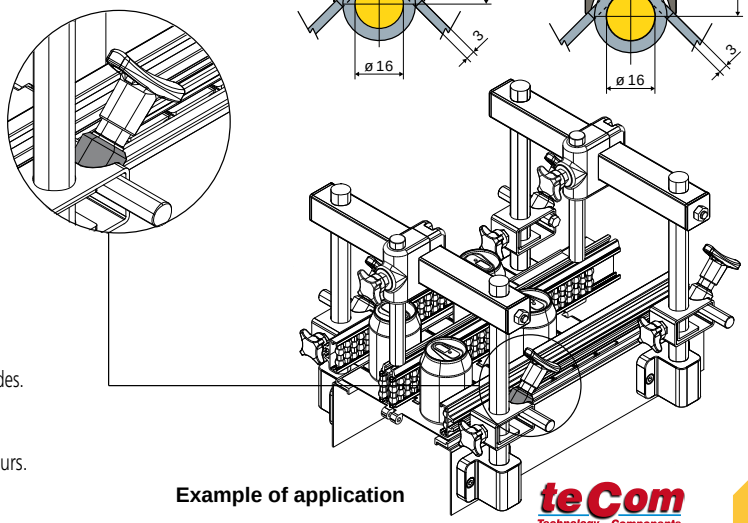

Example of application

Shoes

Part. 428 Product guide shoe

Type 1

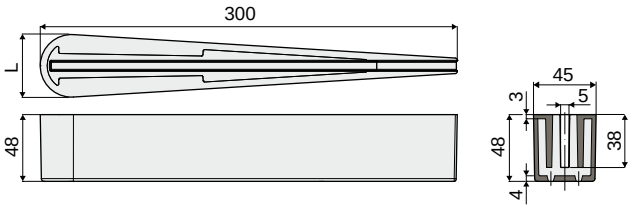

L	Type 1
(mm)	Code
45	**428 / 85063**

Type 2

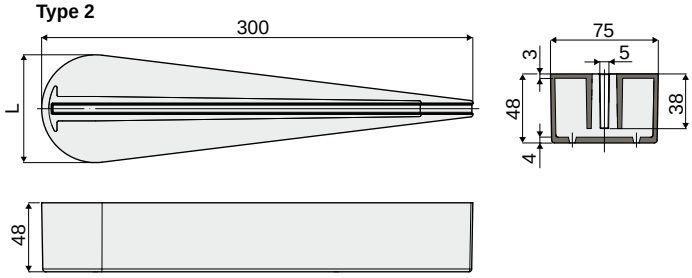

L	Type 2
(mm)	Code
75	**428 / 85064**

MATERIALS: Internal part made of reinforced polypropylene, black colour; external covering in polyethylene , black colour.
FEATURES: To be used as product guide in the conveyor systems.
BOX QUANTITY: 12 pieces.
ON REQUEST:

- Box quantity: According to your request.

Example of application

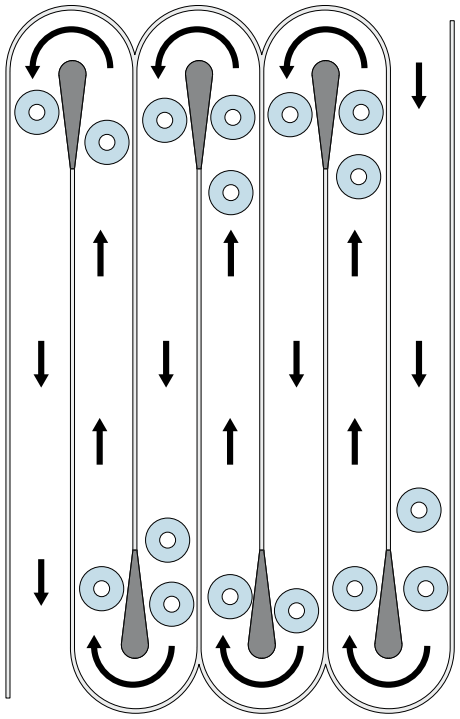

Example of application

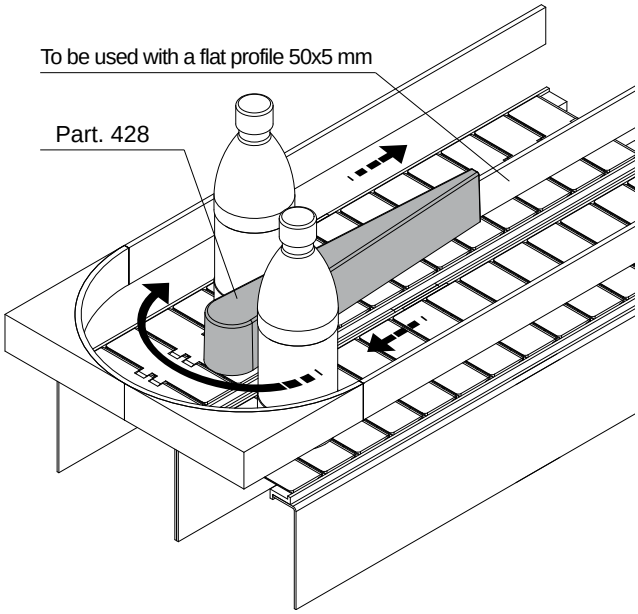

Shoes

Self-adjusting sliding shoe for chain return Part. 267

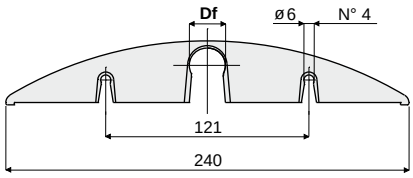

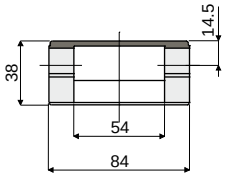

Df Bore for pin of (mm)	Polyamide (black colour) Code	Polyethylene (green colour) Code
18	267 / 82038	267 / 82812
20	267 / 82039	267 / 82813

MATERIALS: Sliding shoe is made of polyamide black colour or of polyethylene green colour.
FEATURES: To be assembled in the chain return near to the sprocket. Snap-on assembly.
BOX QUANTITY: 12 pieces.
ON REQUEST:
- **Sliding shoes:** Other bore sizes, and colours.
- **Box quantity:** According to your request.

Shoe for chain return Part. 359
(for raised rib chains)

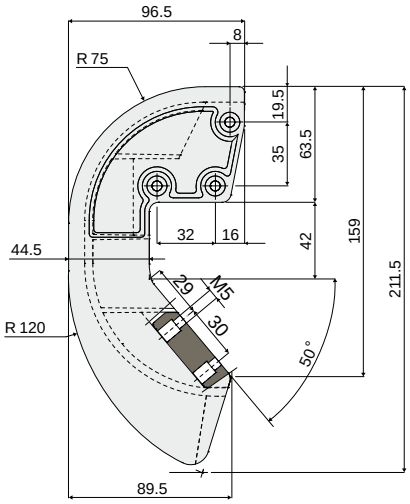

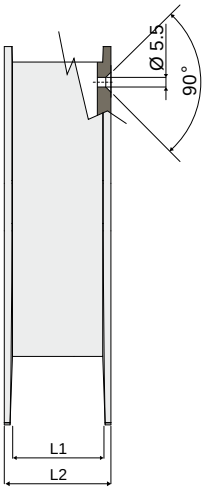

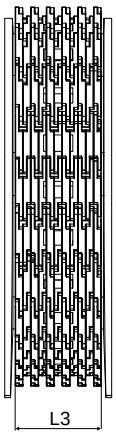

Code	L1	L2	L3 (Chain width)
359 / 83504	41	50	38.5
359 / 83503	49	58.5	47

MATERIALS: Shoe in black polyethylene;
screws in stainless steel AISI 304.
FEATURES: Supplied complete with screws.
To be used in the idler part of the conveyor.
BOX QUANTITY: 8 pieces.
ON REQUEST:
- **Shoes:** Other colours.
- **Box quantity:** According to your request.

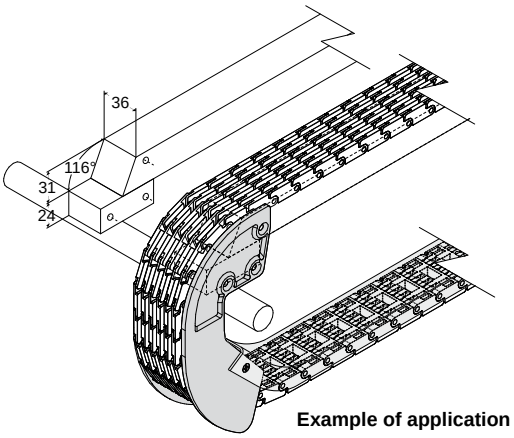

Example of application

Chain tensioners

Part. 277 Chain tensioner with sliding shoe

(for roller chain type DIN 8187 08-B1 and 08-B2)

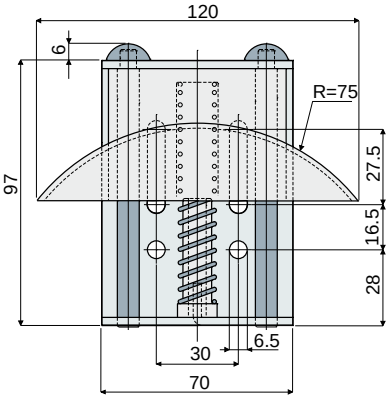

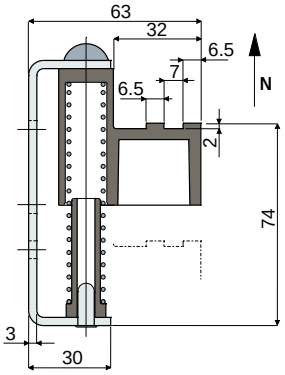

Code	Min. tension load (N)	Max. tension load (N)
277 / 82068	60	110

MATERIALS: External part, pin and spring are made of zinc plated steel; sliding shoe and spring guide are made of polyamide black colour.
FEATURES: To be assembled in the transmissions with roller chain to stretch it.
BOX QUANTITY: 12 pieces.
ON REQUEST:

- **Sliding shoes:** Different shapes for different chains, other materials and colours.
- **Box quantity:** According to your request.

Part. 278 Chain tensioner with sprocket

(for roller chain type DIN 8187 08-B1)

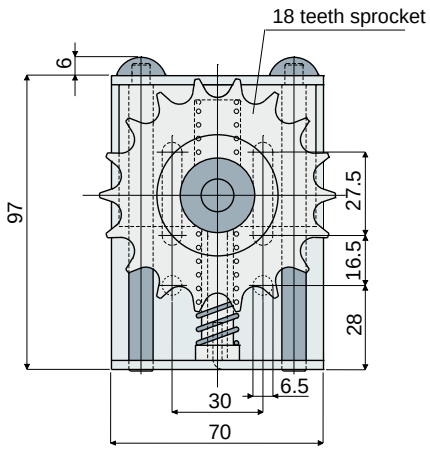

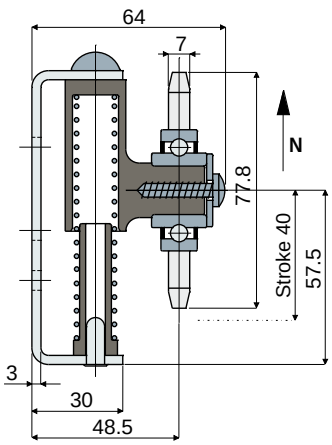

Code	Min. tension load (N)	Max. tension load (N)
278 / 82069	60	110

MATERIALS: External part, sprocket, pins and spring are made of zinc plated steel; cursor and spring guide are made of polyamide black colour.
FEATURES: To be assembled in the transmissions with roller chain to stretch it.
BOX QUANTITY: 12 pieces.
ON REQUEST:

- **Sprockets:** With other number of teeth.
- **Box quantity:** According to your request.

Return rollers

Example of application

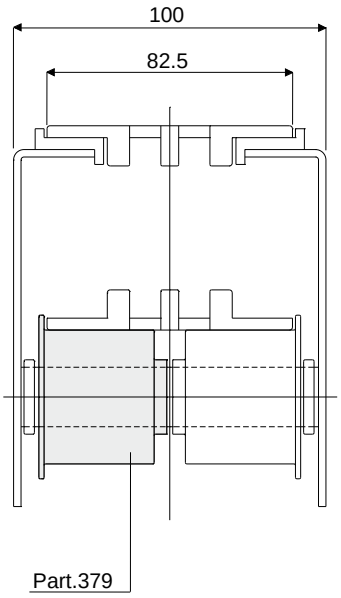

Roller for chain return
(with flange)

Part. **379**

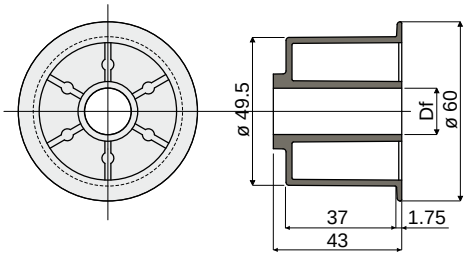

Df Bore for pin of (mm)	Code
15	379 / 84069
20	379 / 84070

MATERIALS: Roller made of reinforced polyamide, black colour.
FEATURES: To be assembled in the chain return.
BOX QUANTITY: 96 pieces.
ON REQUEST:
- Rollers: with special bores, in different colours.
- Box quantity: according to your request.

Example of application

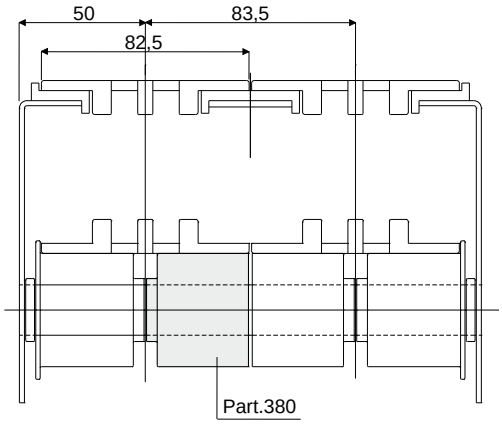

Roller for chain return
(without flange)

Part. **380**

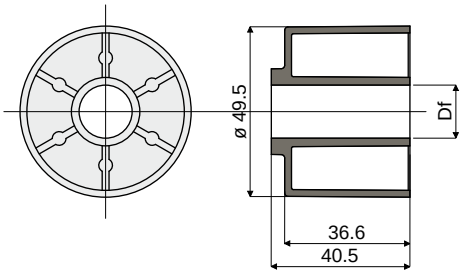

Df Bore for pin of (mm)	Code
15	380 / 84071
20	380 / 84072

MATERIALS: Roller made of reinforced polyamide, black colour.
FEATURES: To be assembled in the chain return.
BOX QUANTITY: 96 pieces.
ON REQUEST:
- Rollers: With special bores, in different colours.
- Box quantity: According to your request.

Return rollers

Part. 270 Roller for chain return
(with flange)

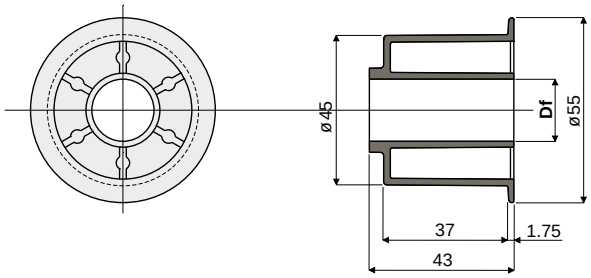

Df Bore for pin of (mm)	Code
15	270 / 82042
20	270 / 82043

MATERIALS: Roller made of polyamide black colour.
FEATURES: To be assembled in the chain return.
BOX QUANTITY: 96 pieces.
ON REQUEST:
- Rollers: Special bores, other colours.
- Box quantity: According to your request.

Example of application

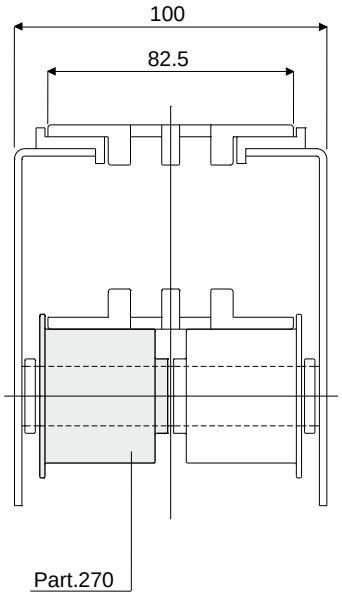

Part. 271 Roller for chain return
(without flange)

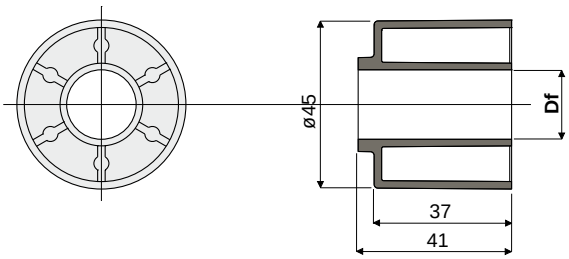

Df Bore for pin of (mm)	Code
15	271 / 82044
20	271 / 82045

MATERIALS: Roller made of polyamide black colour.
FEATURES: To be assembled in the chain return.
BOX QUANTITY: 96 pieces.
ON REQUEST:
- Rollers: Special bores, other colours.
- Box quantity: According to your request.

Example of application

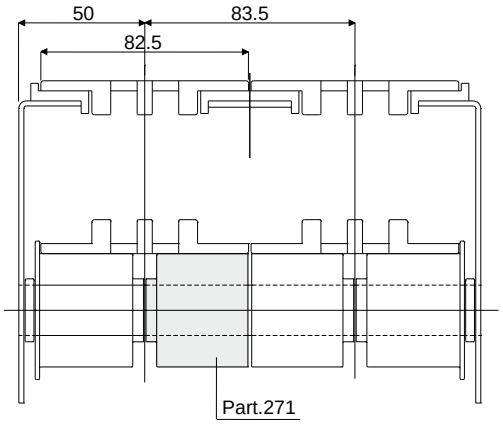

Return rollers

Roller for chain return
(with flange)

Part. **273**

Example of application

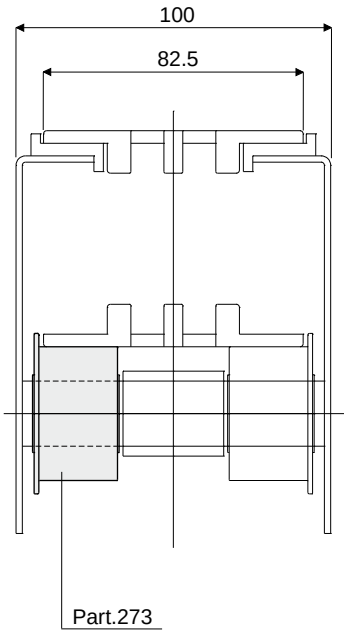

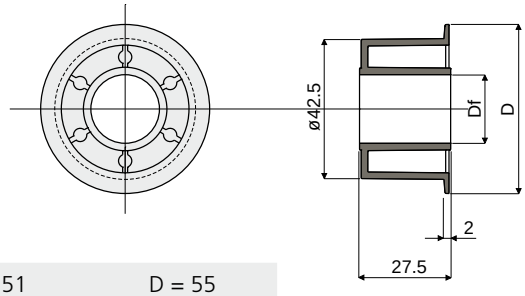

Df Bore for pin of (mm)	D = 51	D = 55
	Code	Code
12	273 / 82048	273 / 85337
16	273 / 82049	273 / 85338
18	273 / 82050	273 / 85339
20	273 / 82051	273 / 85340

MATERIALS: Roller made of polyamide black colour.
FEATURES: To be assembled in the chain return.
BOX QUANTITY: 96 pieces.
ON REQUEST:
- **Rollers:** Special bores, other colours.
- **Box quantity:** According to your request.

Double roller for chain return
(without central flange)

Part. **286**

Example of application

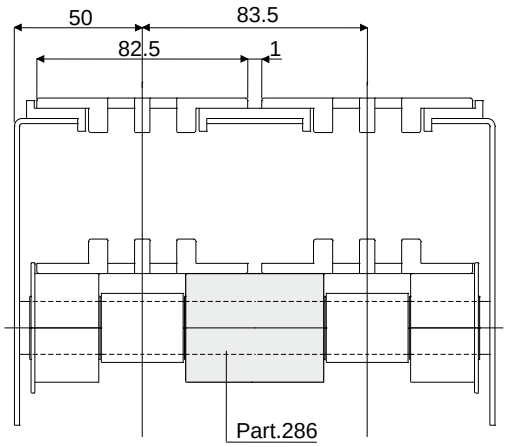

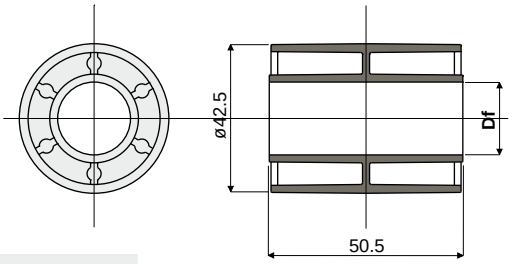

Df Bore for pin of (mm)	Code
12	286 / 82532
16	286 / 82533
18	286 / 82534
20	286 / 82535

MATERIALS: Roller made of polyamide black colour.
FEATURES: To be assembled in the chain return.
BOX QUANTITY: 96 pieces.
ON REQUEST:
- **Rollers:** Special bores, other colours.
- **Box quantity:** According to your request.

Return rollers

Part. 287 Double roller for chain return
(with central flange)

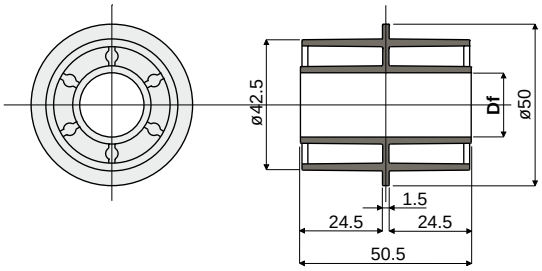

Df Bore for pin of (mm)	Code
12	287 / 82536
16	287 / 82537
18	287 / 82538
20	287 / 82539

MATERIALS: Roller made of polyamide black colour.
FEATURES: To be assembled in the chain return.
BOX QUANTITY: 96 pieces.
ON REQUEST:
- Rollers: Special bores, other colours.
- Box quantity: According to your request.

Example of application

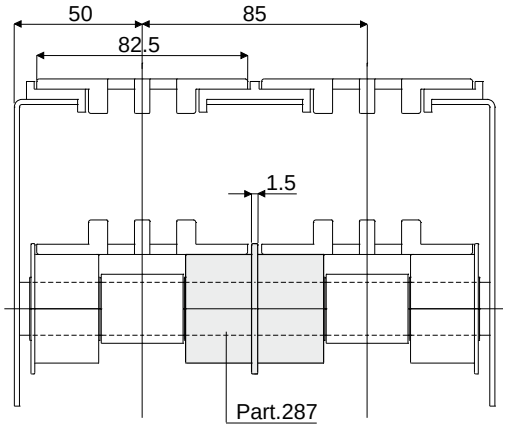

Part. 274 Double roller for chain return
(with central flange)

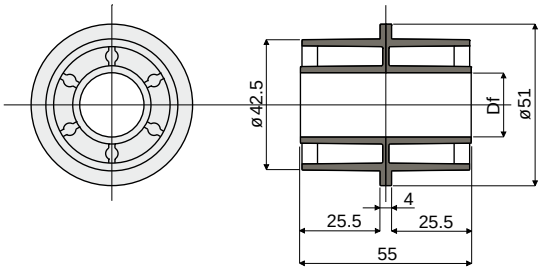

Df Bore for pin of (mm)	Code
12	274 / 82052
16	274 / 82053
18	274 / 82054
20	274 / 82055

MATERIALS: Roller made of polyamide black colour.
FEATURES: To be assembled in the chain return.
BOX QUANTITY: 96 pieces.
ON REQUEST:
- Rollers: Special bores, other colours.
- Box quantity: According to your request.

Example of application

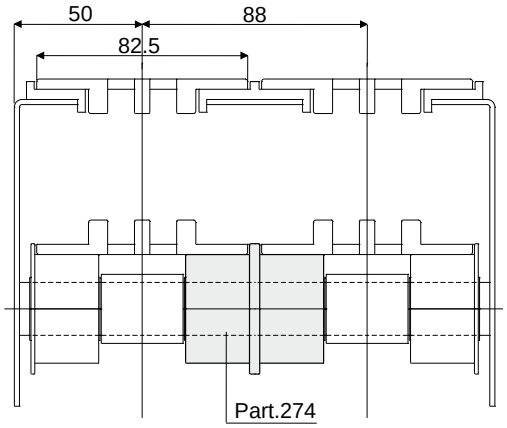

Return rollers

Spacer for rollers for chain return Part. 275

Example of application

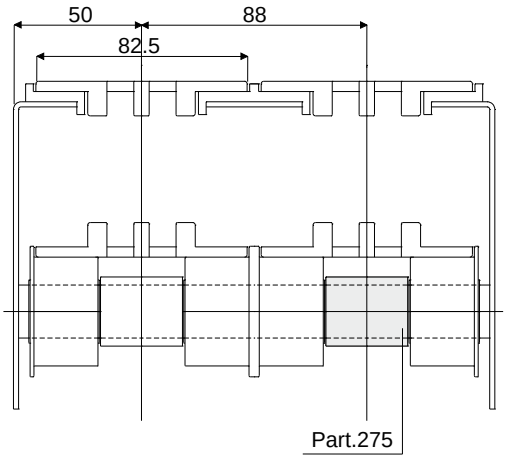

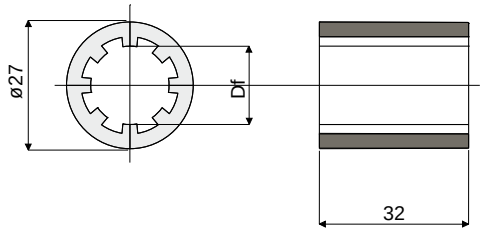

Df Bore for pin of (mm)	Code
12	275 / 82056
16	275 / 82057
18	275 / 82058
20	275 / 82059

MATERIALS: Spacer made of polyamide black colour.
FEATURES: To be assembled in the chain return.
BOX QUANTITY: 96 pieces.
ON REQUEST:
- **Spacers:** Special bores, other colours.
- **Box quantity:** According to your request.

Spacer for rollers for chain return Part. 272

Example of application

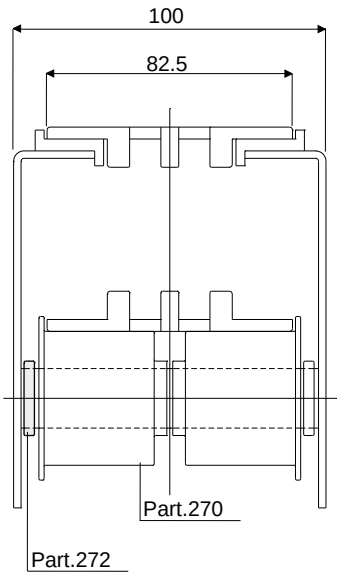

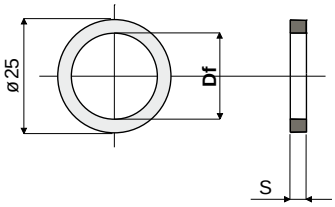

Df Bore for pin of (mm)	S	Code
15	3,5	272 / 82046
16	3,5	272 / 83331
	5,0	272 / 86091
20	3,5	272 / 82047
	5,0	272 / 85186

NEW

MATERIALS: Spacer made of polyamide black colour.
FEATURES: To be assembled in the chain return.
BOX QUANTITY: 96 pieces.
ON REQUEST:
- **Spacers:** Special bores, other colours.
- **Box quantity:** According to your request.

Return rollers

Part. 302 Spacer for chain profiles

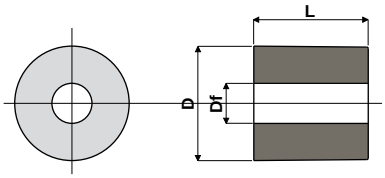

Df Bore diameter (mm)	D (mm)	L (mm)	Code
7	20	20	302 / 82797
7	20	27,5	302 / 82873

MATERIALS: Spacer made of reinforced polyamide black colour.
FEATURES: To be used as fixing spacer for chain profiles.
BOX QUANTITY: 96 pieces.
ON REQUEST:
- Spacers: With special bores and sizes.
- Box quantity: According to your request.

Example of application

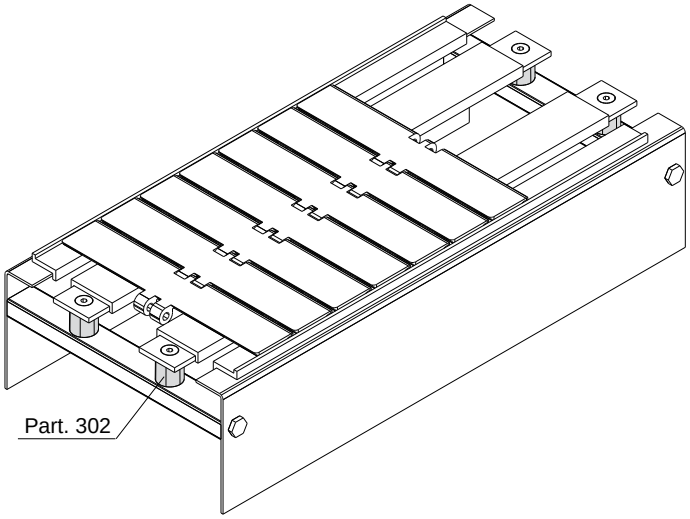

Part. 250 Roller for chain return (with flange)

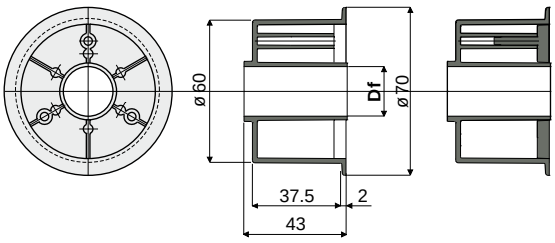

Without cap closure With cap closure

Df Bore for pin of (mm)	Without cap closure Code	With cap closure Code
15	250 / 82201	250 / 82219
16	250 / 82202	250 / 82220
18	250 / 82203	250 / 82221
20	250 / 82204	250 / 82222

MATERIALS: Roller made out of polyamide black colour; cap made out of polyamide grey colour.
FEATURES: To be assembled in the chain return.
BOX QUANTITY: 96 pieces.
ON REQUEST:
- Rollers: Special bores, other colours.
- Box quantity: According to your request.

Example of application

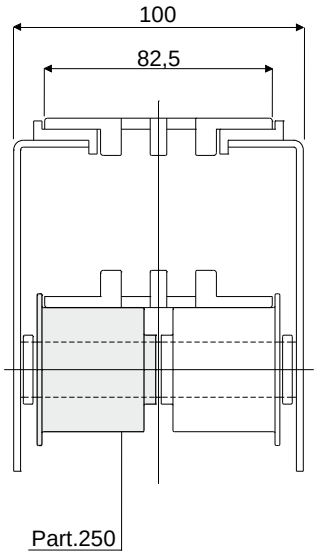

Return rollers

Example of application

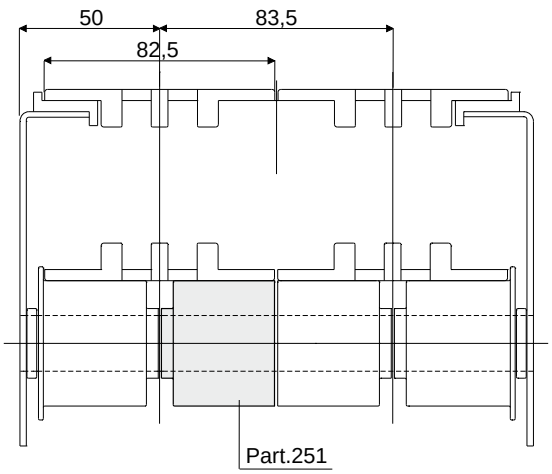

Roller for chain return (without flange) Part. 251

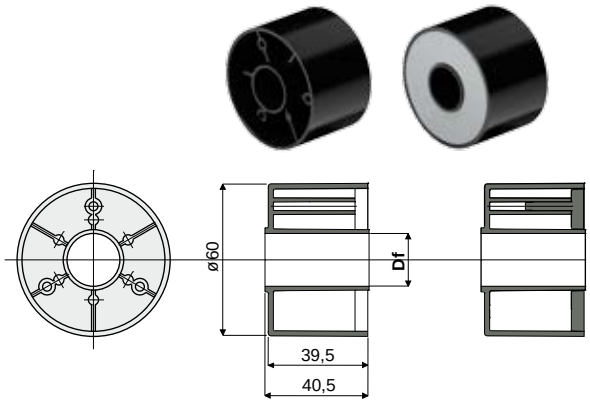

Without cap closure With cap closure

Df Bore for pin of (mm)	Without cap closure Code	With cap closure Code
15	251 / 82205	251 / 82223
16	251 / 82206	251 / 82224
18	251 / 82207	251 / 82225
20	251 / 82208	251 / 82226

MATERIALS: Roller made out of polyamide black colour; cap made out of polyamide grey colour.
FEATURES: To be assembled in the chain return.
BOX QUANTITY: 96 pieces.
ON REQUEST:
- Rollers: Special bores, other colours.
- Box quantity: According to your request.

Example of application

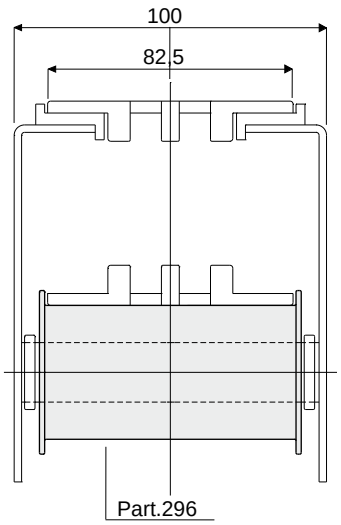

Roller for chain return (with double flange) Part. 296

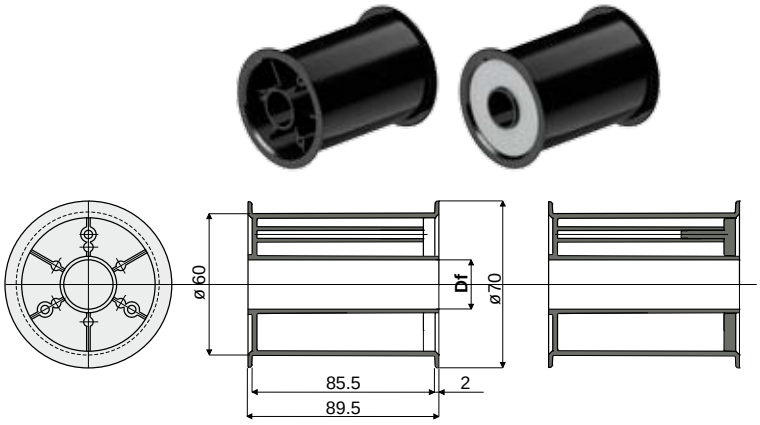

Without cap closure With cap closure

Df Bore for pin of (mm)	Without cap closure Code	With cap closure Code
12	296 / 82611	296 / 82612
14	296 / 82613	296 / 82614
15	296 / 82615	296 / 82616
16	296 / 82617	296 / 82618
18	296 / 82619	296 / 82620
20	296 / 82621	296 / 82622

MATERIALS: Roller made out of polyamide black colour; cap made out of polyamide grey colour.
FEATURES: To be assembled in the chain return.
BOX QUANTITY: 48 pieces.
ON REQUEST:
- Rollers: Special bores, other colours.
- Box quantity: According to your request.

Return rollers

Part. 252 Roller for chain return
(with flange)

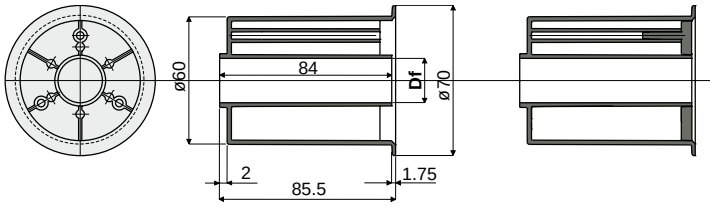

Without cap closure With cap closure

Df Bore for pin of (mm)	Without cap closure	With cap closure
	Code	Code
12	252 / 82624	252 / 82625
14	252 / 82258	252 / 82259
15	252 / 82227	252 / 82231
16	252 / 82228	252 / 82232
18	252 / 82229	252 / 82233
20	252 / 82230	252 / 82234
25	252 / 83307	-
30	252 / 83309	-

MATERIALS: Roller made out of polyamide black colour; cap made out of polyamide grey colour.
FEATURES: To be assembled in the chain return.
BOX QUANTITY: 48 pieces.
ON REQUEST:
- Rollers: Special bores, other colours.
- Box quantity: According to your request.

Example of application

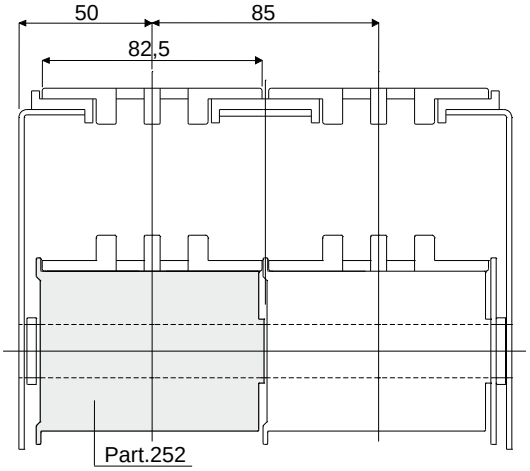

Part. 253 Roller for chain return
(without flange)

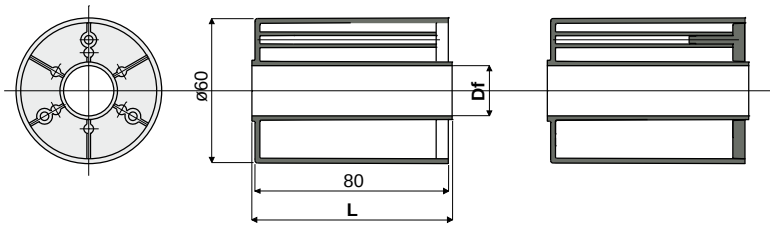

Without cap closure With cap closure

Df Bore for pin of (mm)	Without cap closure		With cap closure	
	L = 82 mm	L = 84 mm	L = 82 mm	L = 84 mm
	Code	Code	Code	Code
12	253 / 82626	253 / 82627	253 / 82628	253 / 82629
14	253 / 82260	253 / 82261	253 / 82262	253 / 82263
15	253 / 82235	253 / 82239	253 / 82243	253 / 82247
16	253 / 82236	253 / 82240	253 / 82244	253 / 82248
18	253 / 82237	253 / 82241	253 / 82245	253 / 82249
20	253 / 82238	253 / 82242	253 / 82246	253 / 82250
25	-	253 / 83313	-	-
30	-	253 / 83314	-	-

MATERIALS: Roller made out of polyamide black colour; cap made out of polyamide grey colour.
FEATURES: To be assembled in the chain return.
BOX QUANTITY: 48 pieces.
ON REQUEST:
- Rollers: Special bores, other colours.
- Box quantity: According to your request.

Example of application

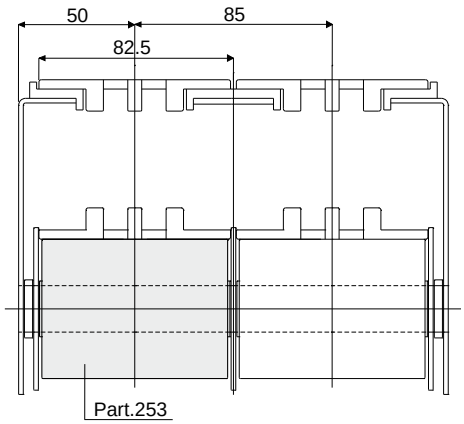

Return rollers

Roller with rubber for chain return (with flange) Part. 249

Example of application

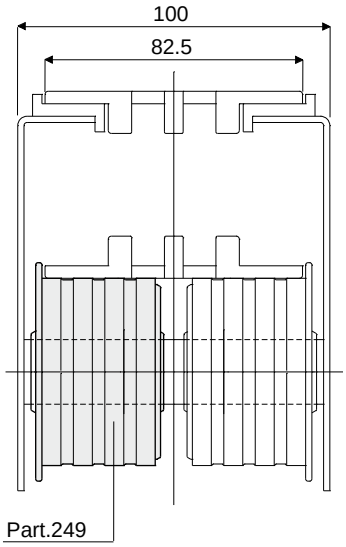

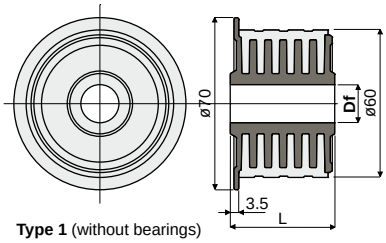

Type 1 (without bearings)

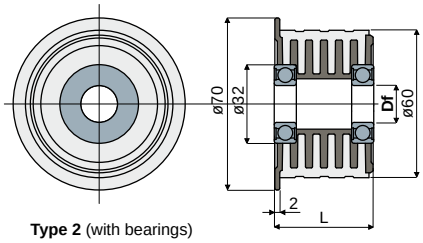

Type 2 (with bearings)

Df Bore for pin of (mm)	L (mm)	Type 1 (without bearings) Code
15	22	**249 / 85346**
15	43	**249 / 82021**
16	22	**249 / 85347**
16	43	**249 / 82022**
18	22	**249 / 85348**
18	43	**249 / 82023**
20	22	**249 / 85349**
20	43	**249 / 82024**

Df Bore for pin of (mm)	L (mm)	Type 2 (with bearings) Code	Type of bearings
15	40.5	**249 / 83642**	6002-ZZ

MATERIALS: Internal part is made of polyamide black colour; external rubber is made of thermoplastic rubber grey colour 65 Shore; bearing made of chrome steel.

FEATURES: This roller is completely closed, total lack of internal cavities to obtain the maximum level of cleanability and noiselessness during working operations.

BOX QUANTITY: 48 pieces.

ON REQUEST:

- **Rollers:** Special bores, other colours.
- **Box quantity:** According to your request.

Roller with rubber for chain return (without flange) Part. 245

Example of application

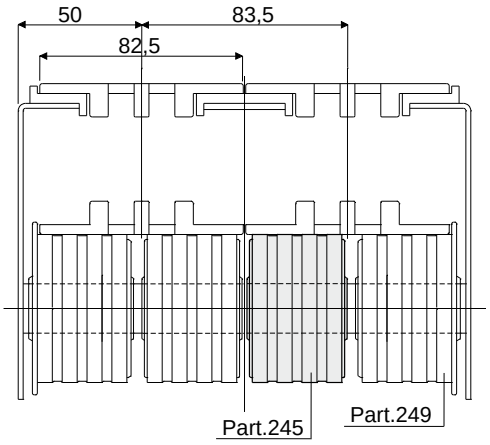

Df Bore for pin of (mm)	Code
12	**245 / 84180**
15	**245 / 82017**
16	**245 / 82018**
18	**245 / 82019**
20	**245 / 82020**

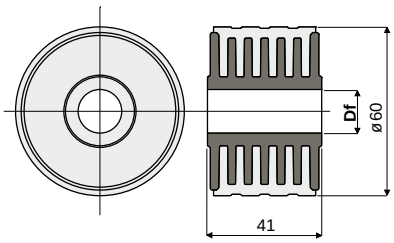

MATERIALS: Internal part is made of polyamide black colour; external rubber is made of thermoplastic rubber grey colour 65 Shore.

FEATURES: This roller is completely closed, total lack of internal cavities to obtain the maximum level of cleanability and noiselessness during working operations.

BOX QUANTITY: 48 pieces.

ON REQUEST:

- **Rollers:** Special bores, other colours.
- **Box quantity:** According to your request.

Roller with rubber for chain return (without flange) Part. 399

Example of application

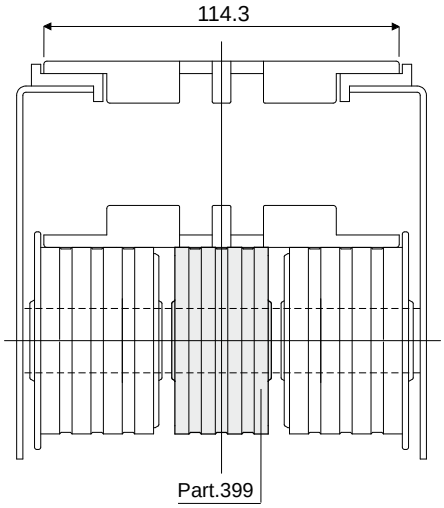

Df Bore for pin of (mm)	Code
12	**399 / 84304**
15	**399 / 84305**
16	**399 / 84306**
18	**399 / 84307**
20	**399 / 84308**

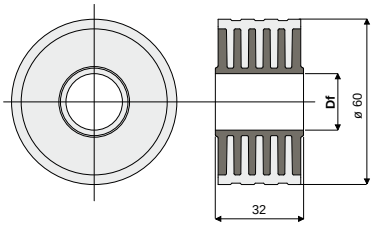

MATERIALS: Internal part is made of polyamide black colour; external rubber is made of thermoplastic rubber grey colour 65 Shore.

FEATURES: This roller is completely closed, total lack of internal cavities to obtain the maximum level of cleanability and noiselessness during working operations.

BOX QUANTITY: 48 pieces.

ON REQUEST:

- **Rollers:** Special bores, other colours.
- **Box quantity:** According to your request.

Return rollers

Part. 293 Roller with rubber for chain return
(without flange)

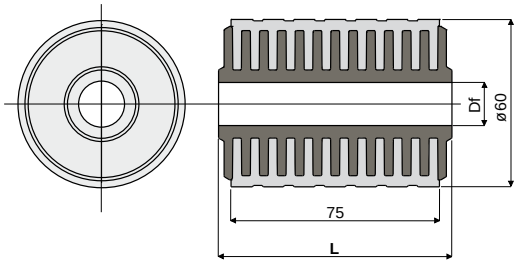

Df Bore for pin of (mm)	L = 82 mm Code	L = 84 mm Code
12	293 / 82789	293 / 82833
15	293 / 82580	293 / 82581
16	293 / 82582	293 / 82583
18	293 / 82584	293 / 82585
20	293 / 82586	293 / 82587

MATERIALS: Internal part is made of polyamide black colour; external rubber is made of thermoplastic rubber grey colour 65 Shore.
FEATURES: This roller is completely closed, total lack of internal cavities to obtain the maximum level of cleanability and noiselessness during working operations.
BOX QUANTITY: 48 pieces.
ON REQUEST:
- Rollers: Special bores, other colours.
- Box quantity: According to your request.

Example of application

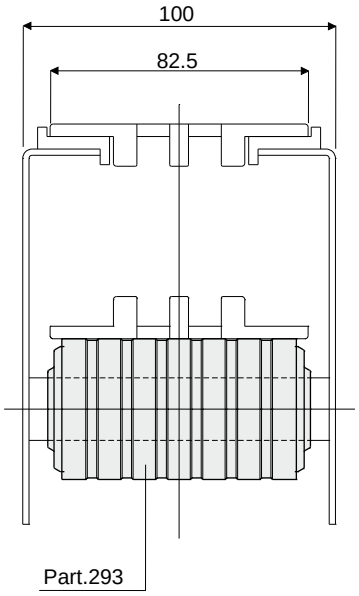

Part. 276 Roller with rubber for chain return
(without flange)

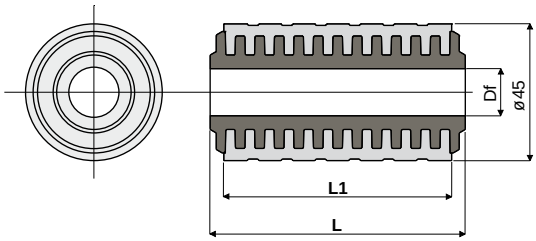

Df Bore for pin of (mm)	L = 41 mm L1 = 36 mm Code	L = 82 mm L1 = 75 mm Code	L = 84 mm L1 = 75 mm Code
12	276 / 85466	276 / 82853	276 / 82855
15	276 / 85462	276 / 82060	276 / 82061
16	276 / 85463	276 / 82062	276 / 82063
18	276 / 85464	276 / 82064	276 / 82065
20	276 / 85465	276 / 82066	276 / 82067

MATERIALS: Internal part is made of polyamide black colour; external rubber is made of thermoplastic rubber grey colour 65 Shore.
FEATURES: This roller is completely closed, total lack of internal cavities to obtain the maximum level of cleanability and noiselessness during working operations.
BOX QUANTITY: 48 pieces.
ON REQUEST:
- Rollers: Special bores, other colours.
- Box quantity: According to your request.

Example of application

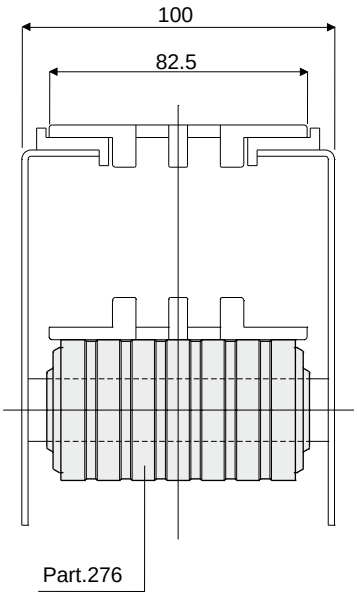

Return rollers

Flange for chain guide
(for roller Part. 251, 252, 253, 245, 293, 250, 249)

Part. **254**

Example of application

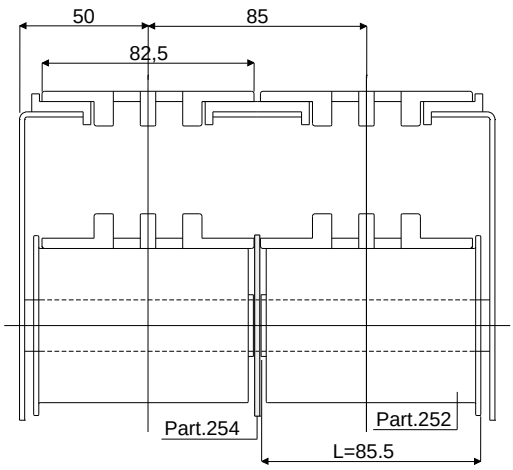

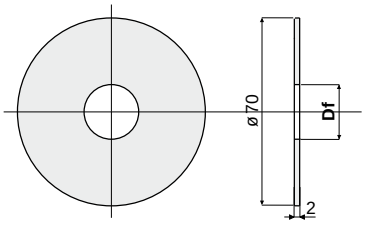

Df Bore for pin of (mm)	Code
12	254 / 82630
14	254 / 82264
15	254 / 82251
16	254 / 82252
18	254 / 82253
20	254 / 82254

MATERIALS: Flange is made of polypropylene black colour.
FEATURES: To be assembled to our roller for chain return Part.251, 252, 253, 245, 293, 250, 249.
BOX QUANTITY: 96 pieces.
ON REQUEST:
- Flanges: Special bores, other colours.
- Box quantity: According to your request.

Flange for chain guide
(for Part. 276, 271, 270)

Part. **282**

Example of application

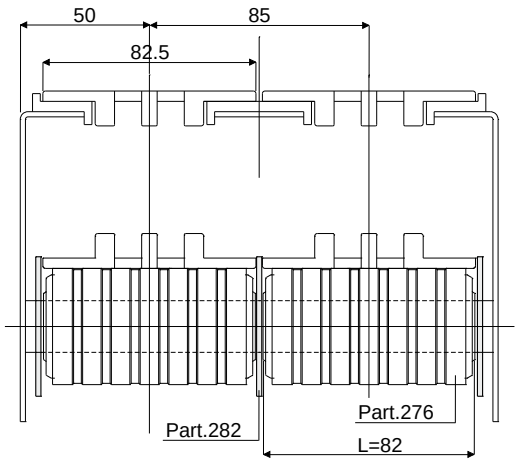

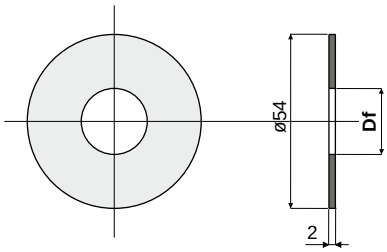

Df Bore for pin of (mm)	Code
15	282 / 82154
16	282 / 82155
18	282 / 82156
20	282 / 82157

MATERIALS: Flange is made of polypropylene black colour.
FEATURES: To be assembled to our roller for chain return Part.276, 271, 270.
BOX QUANTITY: 96 pieces.
ON REQUEST:
- Flanges: Special bores, other colours.
- Box quantity: According to your request.

Idler wheels

Part. 311 Split idler wheel 21 teeth
(for chains series 812-815-820-831)

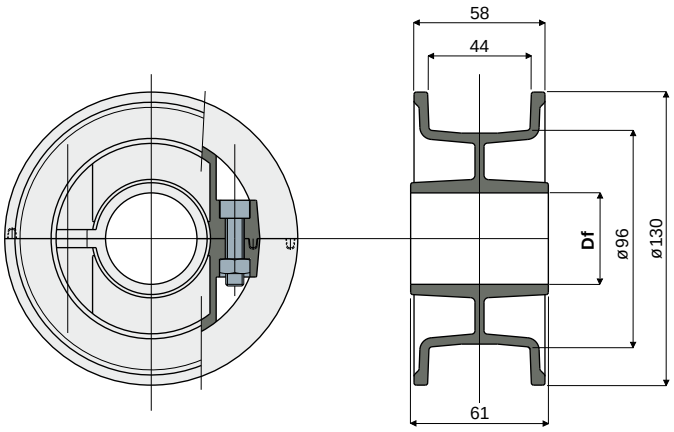

Df Bore for pin of (mm)	Code
25	311 / 82841
30	311 / 82842
35	311 / 82843
40	311 / 82844

MATERIALS: Wheel made of polyamide black colour; bolts and nuts made of stainless steel AISI 304.
FEATURES: Supplied assembled. To be used for chain return in the series 812, 815, 820, 831.
BOX QUANTITY: 12 pieces.
ON REQUEST:
- Wheels: With special bores, other colours.
- Box quantity: According to your request.

Part. 285 Split idler wheel 25 teeth
(for chains series 812-815-820-831)

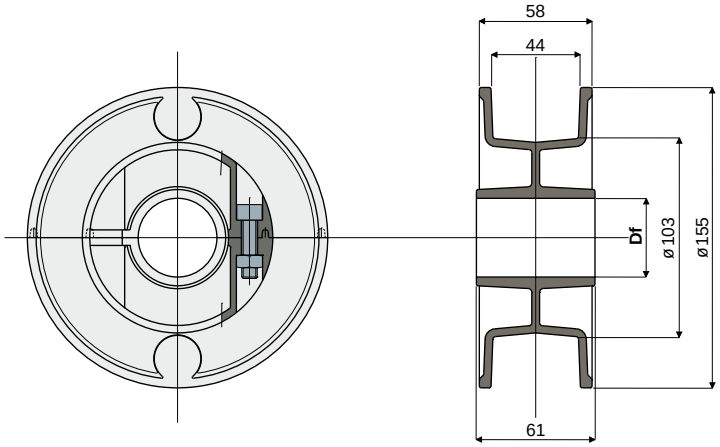

Df Bore for pin of (mm)	Code
25	285 / 82526
30	285 / 82528
35	285 / 82529
40	285 / 82530

MATERIALS: Wheel made of polyamide black colour; bolt and nuts made of stainless steel AISI 304.
FEATURES: Supplied assembled. To be used for chains Series 812, 815, 820, 831.
BOX QUANTITY: 12 pieces.
ON REQUEST:
- Wheels: With special bores, other colours, with customer brand.
- Box quantity: According to your request.

Idler wheels

Split idler wheel 10 teeth
(for chains series 879 Tab, 880 Tab and 881 Tab)

Part. **310**

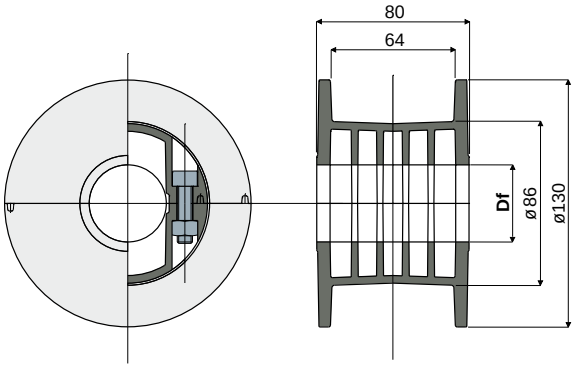

Df Bore for pin of (mm)	Code
20	**310 / 82827**
25	**310 / 82828**
30	**310 / 82829**
35	**310 / 82830**
40	**310 / 82831**

MATERIALS: Wheel made of polyamide black colour; bolts and nuts made of stainless steel AISI 304.
FEATURES: Supplied assembled. To be used for chain return in series 879 Tab, 880 Tab and 881 Tab.
BOX QUANTITY: 12 pieces.
ON REQUEST:
- **Wheels:** With special bores, other colours.
- **Box quantity:** According to your request.

Idler wheel for chain return

Part. **268**

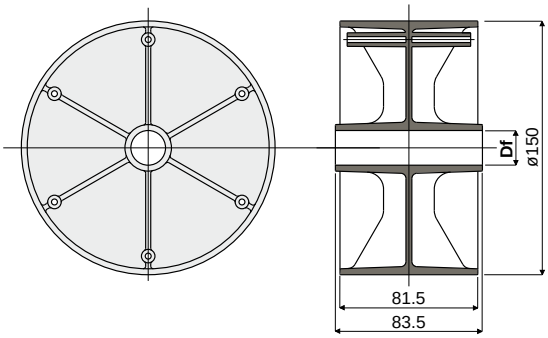

Df Bore for pin of (mm)	Code
20	**268 / 82040**

MATERIALS: Wheel in polyamide black colour.
FEATURES: To be assembled in the chain return near to the sprocket.
BOX QUANTITY: 12 pieces.
ON REQUEST:
- **Wheels:** Other bore sizes, materials and colours.
- **Box quantity:** According to your request.

Flange for chain guide
(for idler wheel Part. 268)

Part. **269**

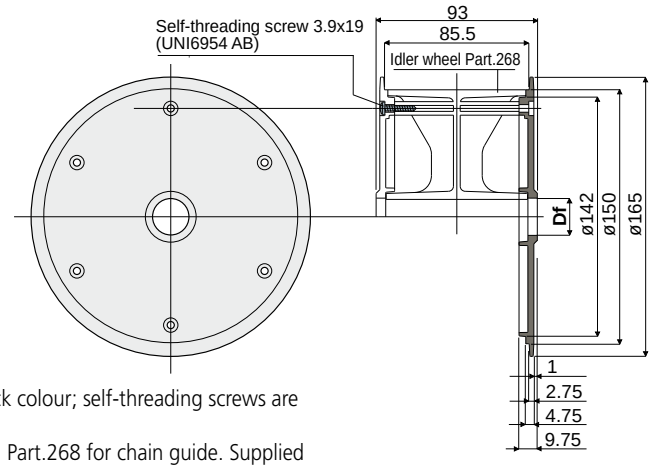

Df Bore for pin of (mm)	Code
20	**269 / 82041**

MATERIALS: Flange is made of polyamide black colour; self-threading screws are made of stainless steel AISI 304.
FEATURES: To be assembled to our idler wheel Part.268 for chain guide. Supplied complete with blocking screws.
BOX QUANTITY: 24 pieces.
ON REQUEST:
- **Flanges:** Other bore sizes, materials and colours.
- **Box quantity:** According to your request.

Idler wheels

Part. 455 Split idler wheel 10 teeth
(for chains series 879, 879 Tab, 880, 880 Tab)

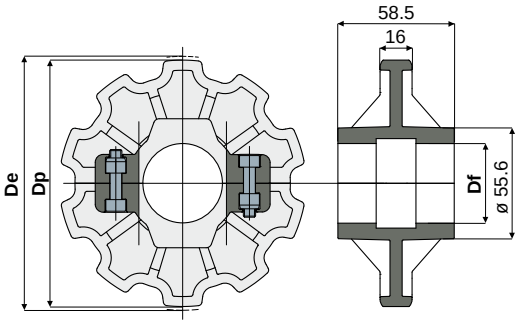

Df (mm)	Dp (mm)	De (mm)	Code
25	123.3	122.5	**455 / 85420**
30	123.3	122.5	**455 / 85421**
35	123.3	122.5	**455 / 85422**
40	123.3	122.5	**455 / 85423**

MATERIALS: Wheel made of polyamide black colour; screws made of stainless steel AISI 304, nuts in nickel plated brass.
BOX QUANTITY: 8 pieces.
ON REQUEST:
- **Wheels:** In other materials.
- **Box quantity:** According to your request.

Part. 454 Split sprocket 10 teeth
(for chains series 879, 879 Tab, 880, 880 Tab)

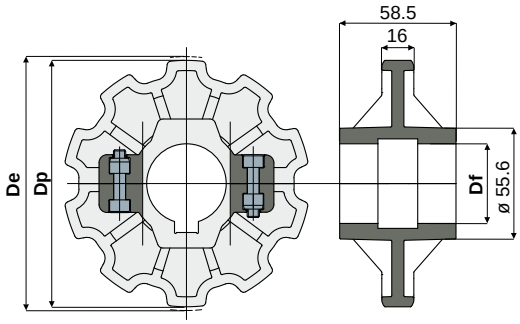

Df (mm)	Dp (mm)	De (mm)	Code
25	123.3	122.5	**454 / 85416**
30	123.3	122.5	**454 / 85417**
35	123.3	122.5	**454 / 85418**
40	123.3	122.5	**454 / 85419**

MATERIALS: Wheel made of reinforced polyamide black colour; screws made of stainless steel AISI 304, nuts in nickel plated brass.
BOX QUANTITY: 8 pieces.
ON REQUEST:
- **Wheels:** In other materials.
- **Box quantity:** According to your request.

Example of application

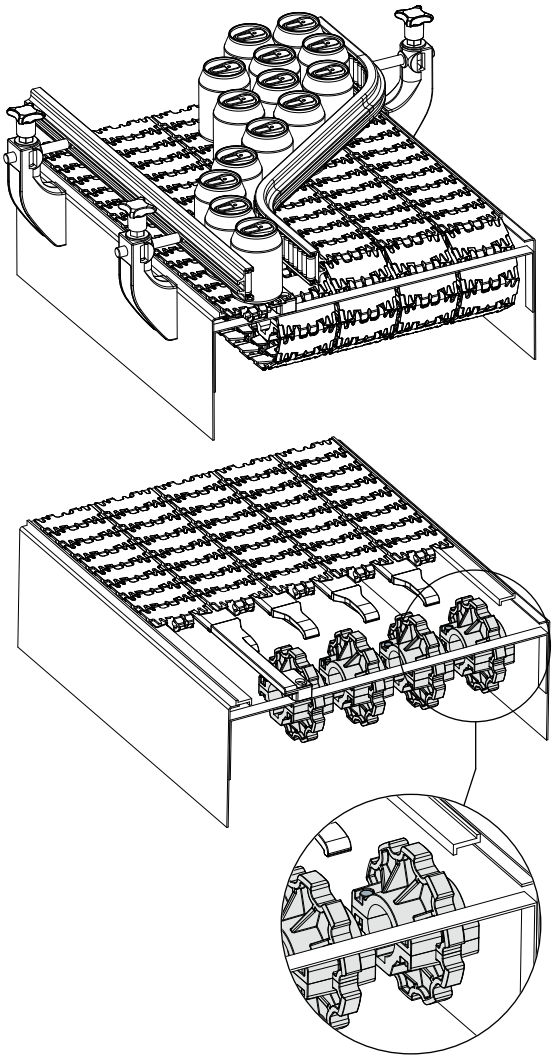

Idler wheels

Example of application

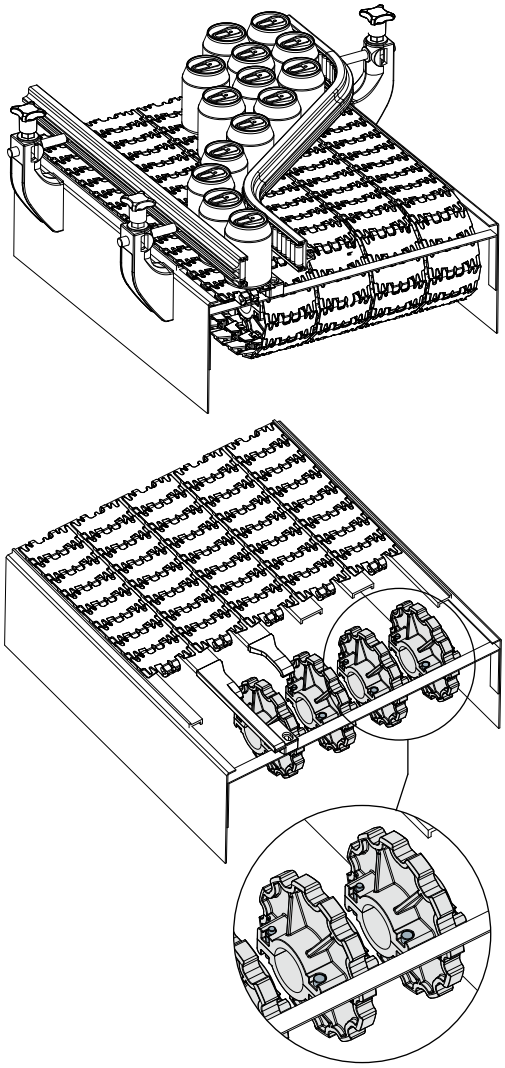

Split idler wheel 12 teeth
(for chains series 879, 879 Tab, 880, 880 Tab)

Part. **457**

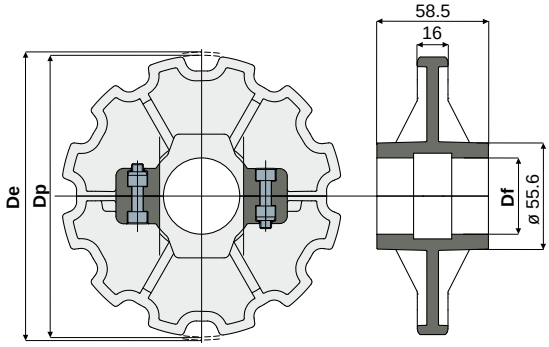

Df (mm)	Dp (mm)	De (mm)	Code
25	147.2	147.4	**457 / 85428**
30	147.2	147.4	**457 / 85429**
35	147.2	147.4	**457 / 85430**
40	147.2	147.4	**457 / 85431**

MATERIALS: Wheel made of polyamide black colour; screws made of stainless steel AISI 304, nuts in nickel plated brass.
BOX QUANTITY: 8 pieces.
ON REQUEST:
- **Wheels:** In other materials.
- **Box quantity:** According to your request.

Split sprocket 12 teeth
(for chains series 879, 879 Tab, 880, 880 Tab)

Part. **456**

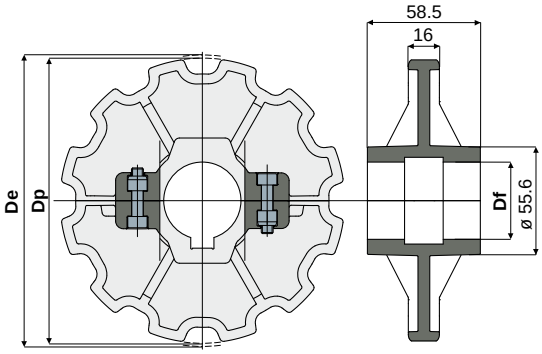

Df (mm)	Dp (mm)	De (mm)	Code
25	147.2	147.4	**456 / 85424**
30	147.2	147.4	**456 / 85425**
35	147.2	147.4	**456 / 85426**
40	147.2	147.4	**456 / 85427**

MATERIALS: Wheel made of reinforced polyamide black colour; screws made of stainless steel AISI 304, nuts in nickel plated brass.
BOX QUANTITY: 8 pieces.
ON REQUEST:
- **Wheels:** In other materials.
- **Box quantity:** According to your request.

Idler wheels

Part. 472 Split idler wheel 12 teeth
(for chains series 882, 882 Tab)

NEW

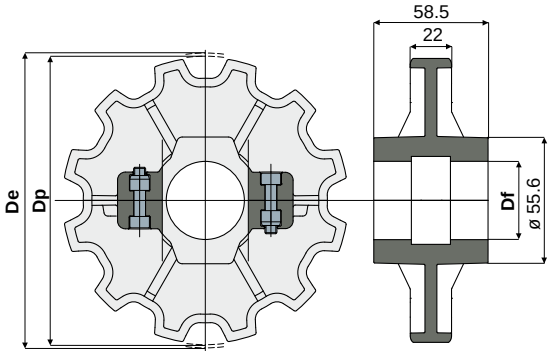

Df (mm)	Dp (mm)	De (mm)	Code
25	147.2	149	**472 / 85969**
30	147.2	149	**472 / 85970**
35	147.2	149	**472 / 85971**
40	147.2	149	**472 / 85972**

MATERIALS: Wheel made of polyamide black colour; screws made of stainless steel AISI 304, nuts in nickel plated brass.
BOX QUANTITY: 8 pieces.
ON REQUEST:
- **Wheels:** In other materials.
- **Box quantity:** According to your request.

Part. 473 Split sprocket 12 teeth
(for chains series 882, 882 Tab)

NEW

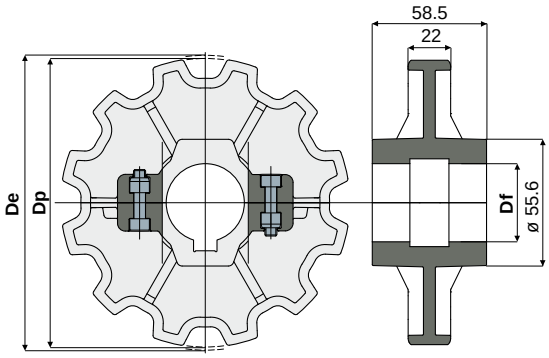

Df (mm)	Dp (mm)	De (mm)	Code
25	147.2	149	**473 / 85973**
30	147.2	149	**473 / 85974**
35	147.2	149	**473 / 85975**
40	147.2	149	**473 / 85976**

MATERIALS: Wheel made of reinforced polyamide black colour; screws made of stainless steel AISI 304, nuts in nickel plated brass.
BOX QUANTITY: 8 pieces.
ON REQUEST:
- **Wheels:** In other materials.
- **Box quantity:** According to your request.

Example of application

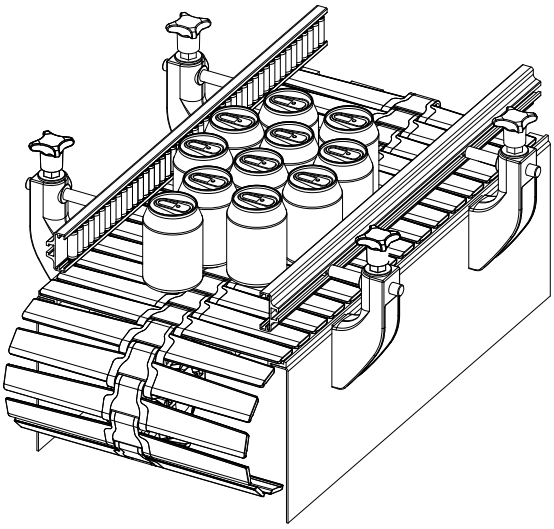

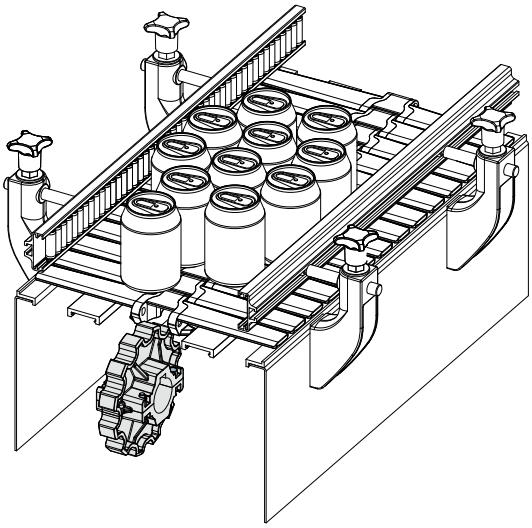

Idler wheels

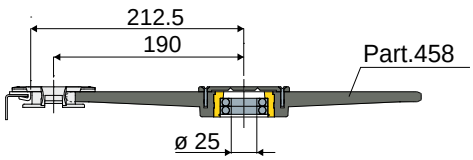

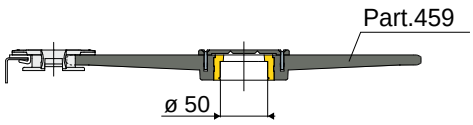

Example of application

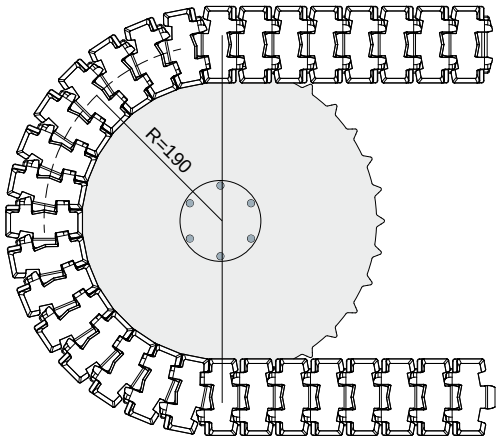

Example of application

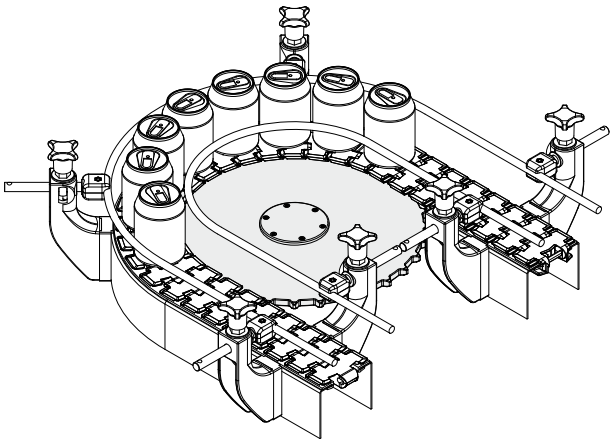

Corner disc 32 teeth

(for chains series 879BO, 879BO Tab, 880BO, 880BO Tab)

Part. **458**

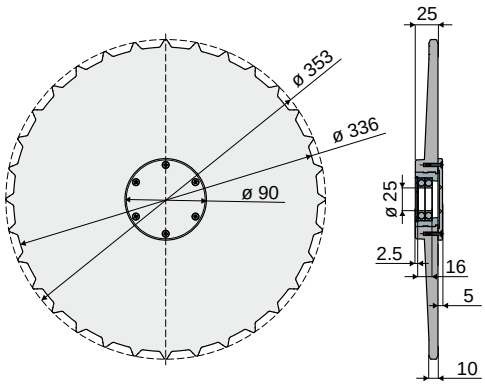

Code
458 / 85435

MATERIALS: Wheel and external cap made of reinforced polyamide black colour; bushing in brass; stop ring and self-threading screws in stainless steel AISI 304; bearing type 16005 25x47x8 in chrome steel.

BOX QUANTITY: 2 pieces.

ON REQUEST:

- **Wheels:** In other materials.
- **Box quantity:** According to your request.

Corner disc 32 teeth

(for chains series 879BO, 879BO Tab, 880BO, 880BO Tab)

Part. **459**

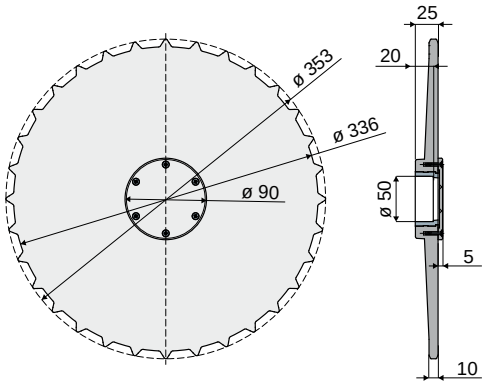

Code
459 / 85436

MATERIALS: Wheel and external cap made of reinforced polyamide black colour; bushing in brass; self-threading screws in stainless steel AISI 304.

BOX QUANTITY: 2 pieces.

ON REQUEST:

- **Wheels:** In other materials.
- **Box quantity:** According to your request.

Bearing supports

Part. 300 Bearing-holder flange

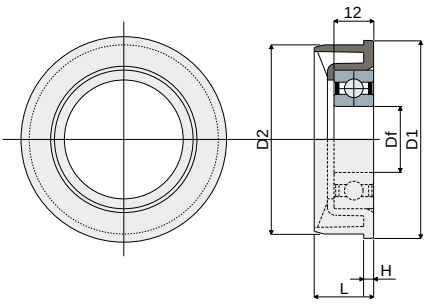

Example of assembly

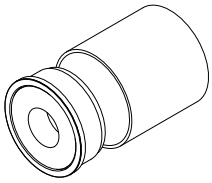

Tube dimensions							Bore for pin	Code	Bearing type
Outside ø	thickness	Inside ø	D1	D2	H	L	Df		
(mm)	(mm)	(mm)	(mm)	(mm)	(mm)	(mm)	(mm)		
60	1,5	57.3	60	57.3	3	18	20	**300 / 84814**	6004/2RS
60	1,5	57.3	60	57.3	3	18	20	**300 / 82682**	Supplied without bearings
50	1,5	47	50	47.3	3	18	20	**300 / 86727**	6004/2RS
50	1,5	47	50	47.3	3	18	20	**300 / 86728**	Supplied without bearings

MATERIALS: Flange is made of polyamide black colour.
FEATURES: To be inserted in the tube sides D=60,3 thickness 1,5 mm to build a roller conveyor or rollers for chain return.
BOX QUANTITY: 24 pieces.
ON REQUEST:
- **Flanges:** Supplied assembled with bearings.
- **Box quantity:** According to your request.

Part. 317 Bearing support for conveyor rollers
(with protective shield)

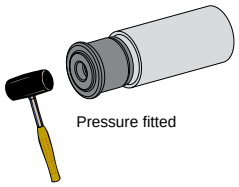

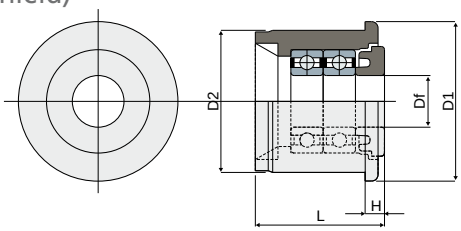

Tube dimensions							Bore for pin	Code	Bearing type
Outside ø	thickness	Inside ø	D1	D2	H	L	Df		
(mm)	(mm)	(mm)	(mm)	(mm)	(mm)	(mm)	(mm)		
25	1,5	22	25	22	3	20	8	**317 / 82911**	688/8-2RS
25	1,5	22	25	22	3	20	8	**317 / 82912**	Supplied without bearings

MATERIALS: Bearing support with internal part and external bushing made of polyamide black colour; bearing made of chrome steel.
FEATURES: To be inserted in the tube sides to build a roller conveyor.
BOX QUANTITY: 24 pieces.
ON REQUEST:
- **Bearing supports:** Other colours.
- **Box quantity:** According to your request.

Part. 263 Bearing support for conveyor rollers
(for idler roller)

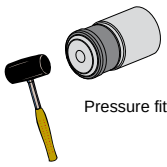

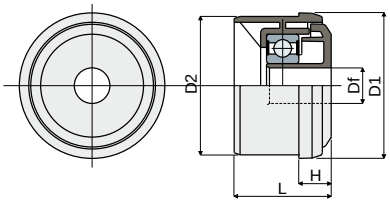

Example of assembly

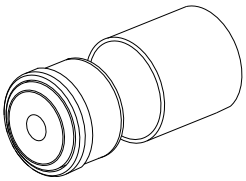

Tube dimensions							Bore for pin	Code	Bearing type
Outside ø	thickness	Inside ø	D1	D2	H	L	Df		
(mm)	(mm)	(mm)	(mm)	(mm)	(mm)	(mm)	(mm)		
50	1,5	47	50	47	11	30	12	**263 / 82032**	6202-2RS
50	1,5	47	50	47	11	30	14	**263 / 82256**	6202-2RS
60	1,5	57	60	57	15	53	12	**263 / 85071**	6202-2RS
60	1,5	57	60	57	15	53	14	**263 / 85068**	6202-2RS
60	2,0	56	60	56	15	53	12	**263 / 85072**	6202-2RS
60	2,0	56	60	56	15	53	14	**263 / 85069**	6202-2RS
60	2,75	54,5	60	54,5	15	53	12	**263 / 85073**	6202-2RS
60	2,75	54,5	60	54,5	15	53	14	**263 / 85070**	6202-2RS

MATERIALS: Bearing support with protective shield made of polyamide grey colour; external bushing made of polyamide black colour; bearing made of chrome steel.
FEATURES: To be inserted in the tube sides to build a roller conveyor.
BOX QUANTITY: 24 pieces.
ON REQUEST:
- **Bearing supports:** Other colours, bores with different sizes.
- **Box quantity:** According to your request.

Bearing supports

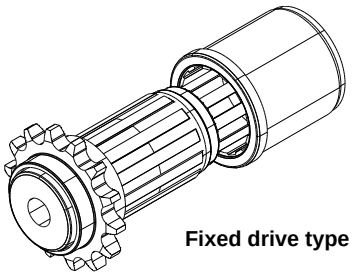

Fixed drive type

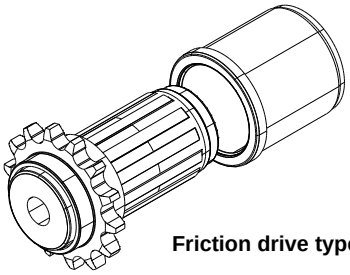

Friction drive type

14 teeth bearing support for conveyor rollers
(for drive roller)

Part. **264**

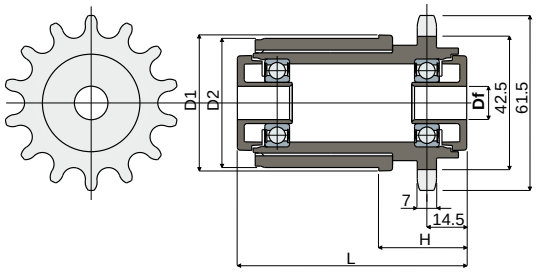

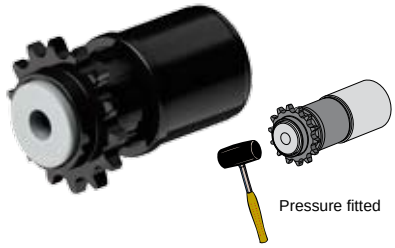

Tube dimensions							Bore for pin	Fixed drive type	Friction drive type	Bearing type
Outside ø (mm)	Thickness (mm)	Inside ø (mm)	D1 (mm)	D2 (mm)	H (mm)	L (mm)	Df (mm)	Code	Code	
50	1,5	47	50	47	32	83	12	**264 / 82033**	**264 / 82217**	6002-2RS
50	1,5	47	50	47	32	83	14	**264 / 82215**	**264 / 82218**	6002-2RS
60	1,5	57	60	57	39	83	12	**264 / 85074**	**264 / 84244**	6002-2RS
60	1,5	57	60	57	39	83	14	**264 / 85075**	**264 / 84245**	6002-2RS
60	2,0	56	60	56	39	83	12	**264 / 85076**	**264 / 84246**	6002-2RS
60	2,0	56	60	56	39	83	14	**264 / 85077**	**264 / 84247**	6002-2RS
60	2,75	54,5	60	54,5	39	83	12	**264 / 85078**	**264 / 84251**	6002-2RS
60	2,75	54,5	60	54,5	39	83	14	**264 / 85079**	**264 / 84253**	6002-2RS

MATERIALS: Bearing support with protective shield made of polyamide grey colour; external bushing made of polyamide black colour; bearing made of chrome steel.
FEATURES: To be inserted in the tube sides to build a roller conveyor. Drive sprocket with 14 teeth for roller chain type DIN 8187-08-b1.
BOX QUANTITY: 24 pieces.
ON REQUEST:

- **Bearing supports:** other colours, bores with different sizes.
- **Box quantity:** According to your request.

Roller chain type DIN 8187 tipo 08-B1

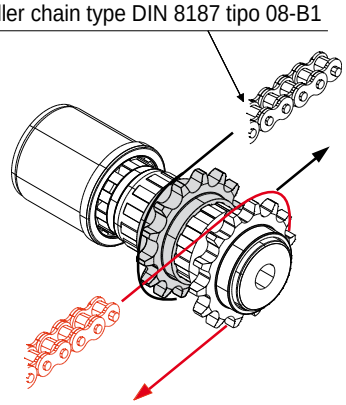

Example of assembly

14 teeth sprocket
(for bearing support Part. 264)

Part. **265**

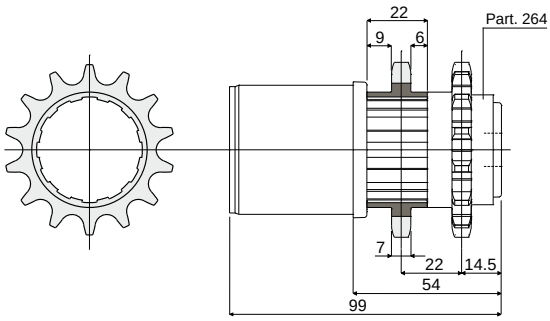

Code
265 / 82034

MATERIALS: Drive sprocket is made of polyamide black colour.
FEATURES: Accessory to be used with bearing support Part.264 to make the drive roller to roller. This drive type allows a greater torque.
BOX QUANTITY: 24 pieces.
ON REQUEST:

- **Sprockets:** other colours.
- **Box quantity:** According to your request.

Bushings

Part. 336 Threaded bushings
(for conveyor flanks)

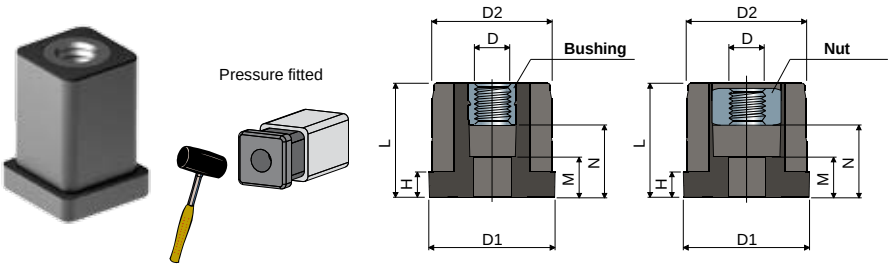

Example of application

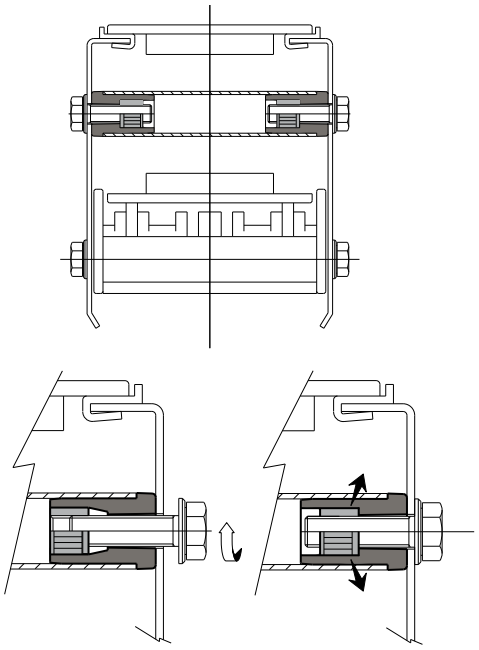

Tube dimensions										With bushing
Outside (mm)	Thickness (mm)	Inside (mm)	Thread D	D1 (mm)	D2 (mm)	H (mm)	L (mm)	M (mm)	N (mm)	Code
20x20	1,5	17x17	M8	20x20	17x17	5	28	13	18	**336 / 83138**

Tube dimensions										With nut
Outside (mm)	Thickness (mm)	Inside (mm)	Thread D	D1 (mm)	D2 (mm)	H (mm)	L (mm)	M (mm)	N (mm)	Code
20x20	1,5	17x17	M8	20x20	17x17	5	28	13	18	**336 / 84563**

MATERIALS: Bushing in reinforced polyamide black colour; threaded insert or nut in nickel plated brass.
FEATURES: Supplied assembled. To be assembled in the conveyor flanks.
BOX QUANTITY: 48 pieces.
ON REQUEST:
- **Bushes:** Special thickness tube.
- **Box quantity:** According to your request.

Part. 335 Threaded bushings
(for conveyor flanks)

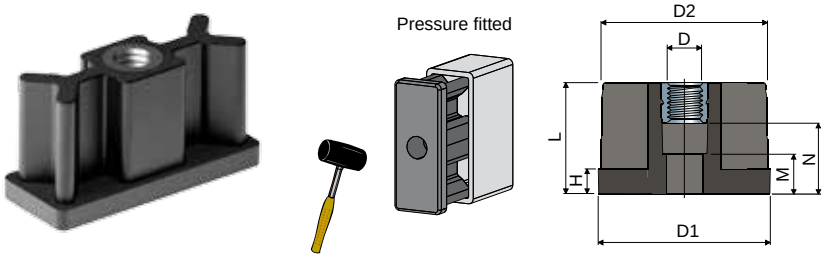

Example of application

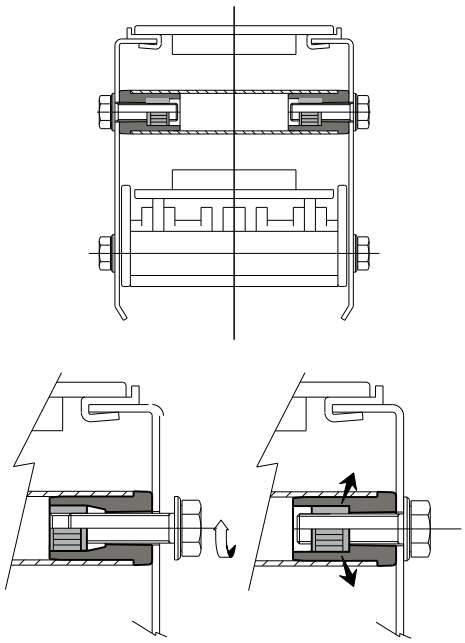

Tube dimensions										Code
Outside (mm)	Thickness (mm)	Inside (mm)	Thread D	D1 (mm)	D2 (mm)	H (mm)	L (mm)	M (mm)	N (mm)	
20x50	2	16x46	M8	20x50	16x46	5	28	13	18	**335 / 83128**

MATERIALS: Bush in reinforced polyamide black colour; threaded insert in nickel plated brass.
FEATURES: Supplied assembled. To be assembled in the conveyor flanks.
BOX QUANTITY: 48 pieces.
ON REQUEST:
- **Bushes:** Special thickness tube.
- **Box quantity:** According to your request.

Bushings

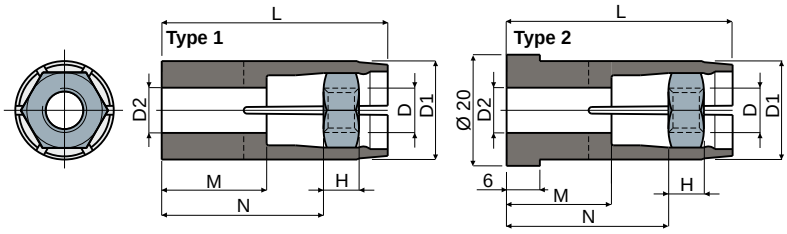

Expansion plugs
(for round tubes)

Part. **283**

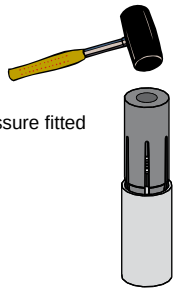

Example of application

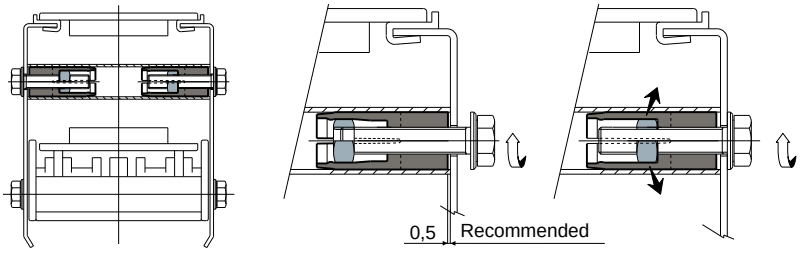

Tube dimensions										Type 1
Outside (mm)	Thickness (mm)	Inside (mm)	D (mm)	D1 (mm)	D2 (mm)	H (mm)	L (mm)	M (mm)	N (mm)	Code
20	1,5	17	M8	17	8,5	6,5	40	18	28	**283 / 82579**
25	1,5	22	M10	22	10,5	8	51	23	36	**283 / 82505**

Tube dimensions										Type 2
Outside (mm)	Thickness (mm)	Inside (mm)	D (mm)	D1 (mm)	D2 (mm)	H (mm)	L (mm)	M (mm)	N (mm)	Code
20	1,5	17	M8	17	8,5	6,5	40	19	29	**283 / 82664**
25	1,5	22	M8	22	8,5	6,5	51	23	36	**283 / 84865**

MATERIALS: Plug made of reinforced polyamide black colour; nut made of stainless steel AISI 304.
FEATURES: Supplied assembled. To be assembled in the conveyor flanks.
BOX QUANTITY: 48 pieces.
ON REQUEST:
- **Plugs:** Special thickness tube.
- **Box quantity:** According to your request.

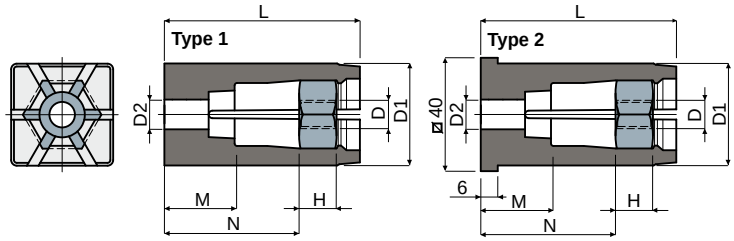

Expansion plugs
(for square tubes)

Part. **414**

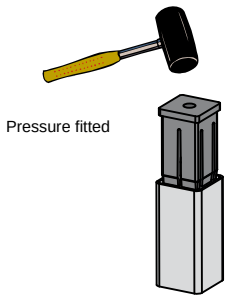

Example of application

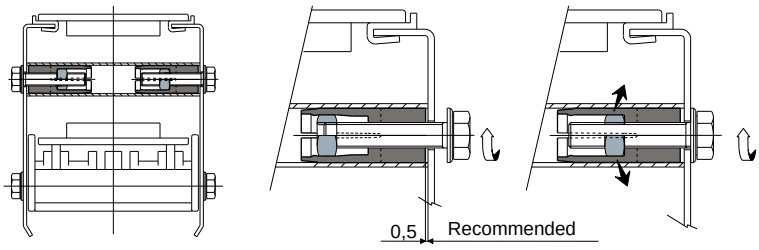

Tube dimensions										Type 1
Outside (mm)	Thickness (mm)	Inside (mm)	D (mm)	D1 (mm)	D2 (mm)	H (mm)	L (mm)	M (mm)	N (mm)	Code
40x40	2	36x36	M8	36	10,5	13	69	24,8	47,5	**414 / 84868**
40x40	2	36x36	M10	36	10,5	13	69	24,8	47,5	**414 / 85096**

Tube dimensions										Type 2
Outside (mm)	Thickness (mm)	Inside (mm)	D (mm)	D1 (mm)	D2 (mm)	H (mm)	L (mm)	M (mm)	N (mm)	Code
40x40	2	36x36	M8	36	10,5	13	69	24,8	47,5	**414 / 84545**
40x40	2	36x36	M10	36	10,5	13	69	24,8	47,5	**414 / 84546**

MATERIALS: Plug made of reinforced polyamide black colour; nut made of brass.
FEATURES: Supplied assembled. To be assembled in the conveyor flanks.
BOX QUANTITY: 48 pieces.
ON REQUEST:
- **Plugs:** Special thickness tube.
- **Box quantity:** According to your request.

Hinges

Part. 233 Hinge

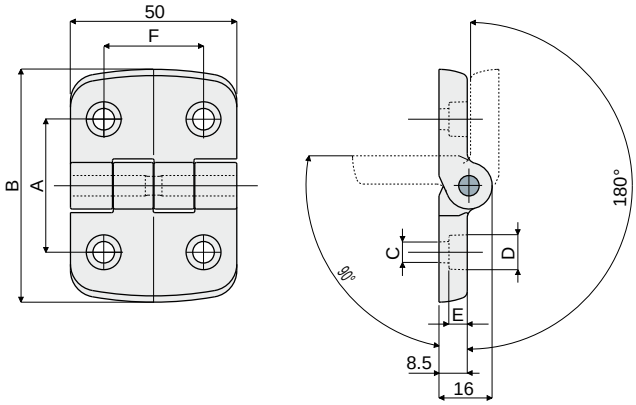

A (mm)	B (mm)	C (mm)	D (mm)	E (mm)	F (mm)	Code
34	50	5,5	10,5	3,5	34	**233 / 80970**
31	50	5,5	9	5	30	**233 / 80772**
40	70	6,5	10,5	6	30	**233 / 80773**
46	70	6,5	10,5	6	30	**233 / 80774**
46	70	8,5	13,5	5	30	**233 / 80775**

MATERIALS: Hinge made of reinforced polyamide black colour; pin made of stainless steel AISI 304.
FEATURES: Maximum rotation 270°
BOX QUANTITY: 24 pieces.
ON REQUEST:
- **Hinges:** In reinforced polypropylene, other colours.
- **Box quantity:** According to your request.

Part. 234 Hinge

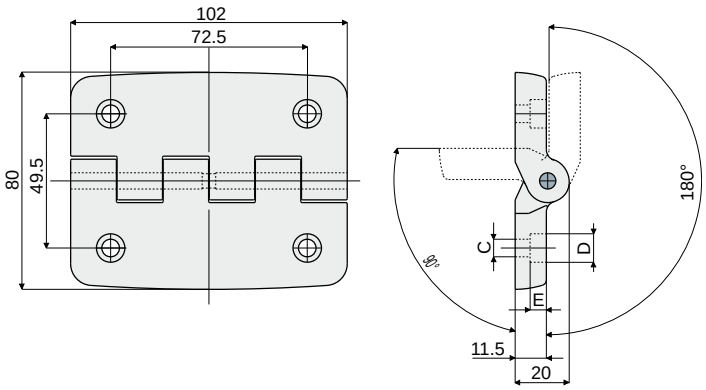

C (mm)	D (mm)	E (mm)	Code
6,5	10,5	6	**234 / 80776**
8,5	13,5	8	**234 / 80777**

MATERIALS: Hinge made of reinforced polyamide black colour; pin made of stainless steel AISI 304.
FEATURES: Maximum rotation 270°.
BOX QUANTITY: 24 pieces.
ON REQUEST:
- **Hinges:** In reinforced polypropylene, other colours.
- **Box quantity:** According to your request.

Split shaft collars

Split shaft collars Part. 288

Example of applications

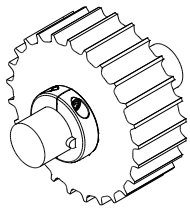

Sprockets

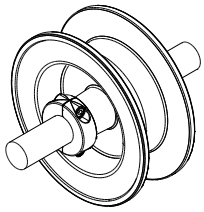

Idler wheels

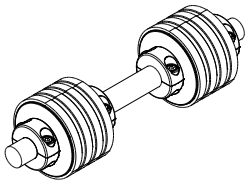

Rollers for chain return

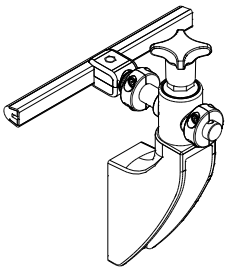

Guide rail bracket

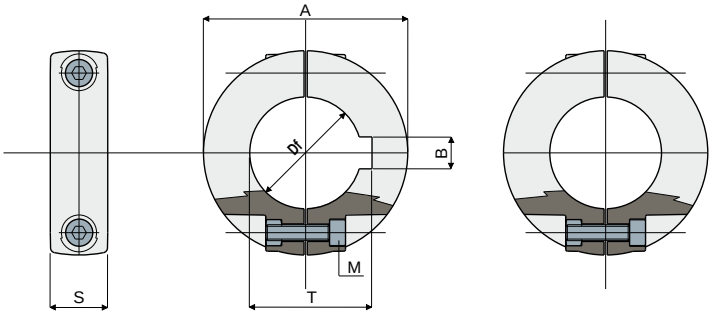

With Keyway

Without Keyway

With keyway						
Df (mm)	A (mm)	S (mm)	M (mm)	B (mm)	T (mm)	Code
20	40	14	M4	6	22,8	**288 / 82555**
25	50	14	M5	8	28,3	**288 / 82556**
30	50	14	M5	8	33,3	**288 / 82557**
35	65	14	M5	10	38,3	**288 / 82558**
40	65	14	M5	12	43,3	**288 / 82559**

Without keyway				
Df (mm)	A (mm)	S (mm)	M (mm)	Code
12	35	13	M4	**288 / 82560**
14	35	13	M4	**288 / 82561**
16	35	13	M4	**288 / 82562**
18	40	14	M4	**288 / 82563**
20	40	14	M4	**288 / 82564**
25	50	14	M5	**288 / 82565**
30	50	14	M5	**288 / 82566**
35	65	14	M5	**288 / 82567**
40	65	14	M5	**288 / 82568**

MATERIALS: Collars made out of reinforced polyamide black colour; bolt and nuts made out of stainless steel AISI 304.

FEATURES: Supplied assembled. To be assembled on the shaft to obtain wheels axial blocking; to be assembled on pins for guides supporting to adjust the position of guides according to the bottle size.

BOX QUANTITY: 96 pieces.

ON REQUEST:

- **Collars:** With special bores, other colours.
- **Box quantity:** According to your request.

Split shaft collar Part. 376

(with square bore 40x40 mm - 60x60 mm)

Example of application

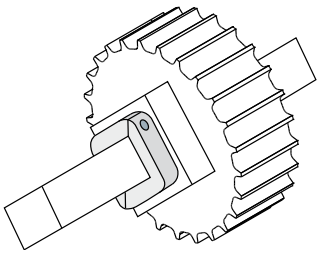

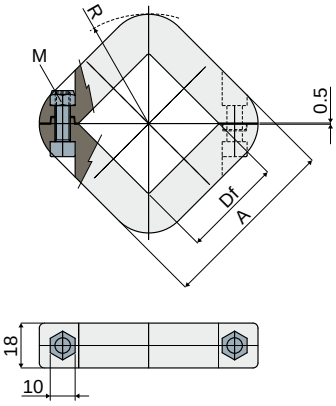

M (mm)	Df (mm)	A (mm)	R (mm)	Code
M6	40	72	44	**376 / 83895**
M6	60	92	58	**376 / 85067**

MATERIALS: Collars made out of reinforced polyamide black colour; self-locking nuts and screws made of stainless steel AISI 304.

FEATURES: To be assembled on the shaft to obtain wheels axial blocking.

BOX QUANTITY: 96 pieces.

ON REQUEST:

- **Box quantity:** According to your request.

Modular transfer plates

Part. **257**

Modular transfer plates with lip
(width 115 mm 5 rows of rollers)

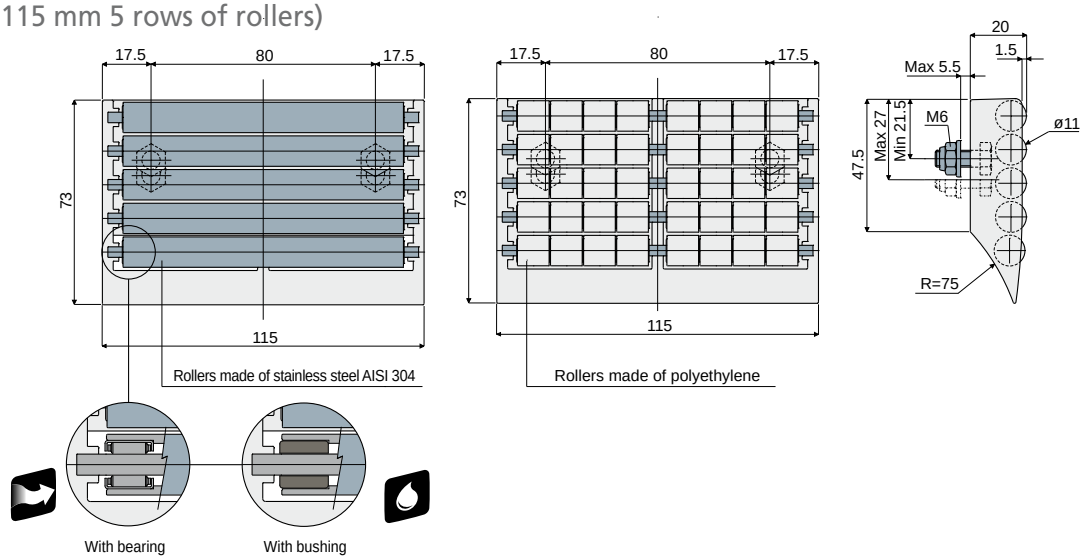

Rollers made of stainless steel AISI 304		Rollers made of polyethylene
With bearings	With bushings	
Code	Code	Code
257 / 85004	257 / 85802	257 / 82005

MATERIALS: Modular transfer plate with external module made of grey colour acetal; rollers made of grey colour polyethylene or stainless steel AISI 304; bearings made of chrome steel; bushings made of auto-lubricating polyamide; pins and fixing nuts made of stainless steel AISI 304.

FEATURES: To be assembled at the end of your conveyor to help the products transfer. Low friction coefficient, minimum noise level, extremely cleanable. The versions with rollers made in stainless steel, are available both with bearings made of chrome steel or with bushings made of auto-lubricating polyamide which are suitable for applications in contact with water.

BOX QUANTITY: 8 pieces.

ON REQUEST:

- **External module and rollers:** Can be produced in other colours.
- **Box quantity:** According to your request.

Part. **417**

Modular transfer plates with lip
(width 115 mm 4 rows of rollers)

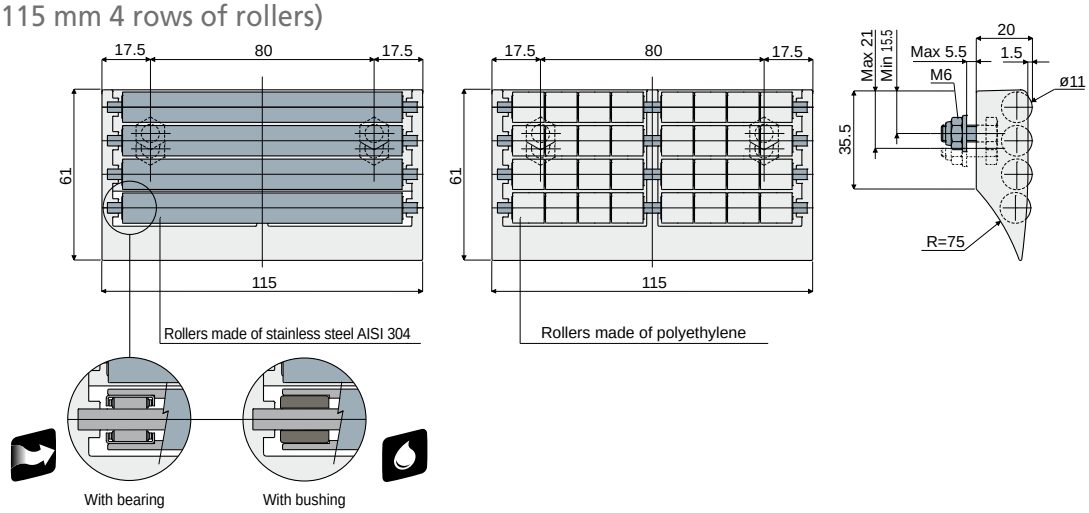

Rollers made of stainless steel AISI 304		Rollers made of polyethylene
With bearings	With bushings	
Code	Code	Code
417 / 85031	417 / 85803	417 / 84576

MATERIALS: Modular transfer plate with external module made of grey colour acetal; rollers made of grey colour polyethylene or stainless steel AISI 304; bearings made of chrome steel; bushings made of auto-lubricating polyamide; pins and fixing nuts made of stainless steel AISI 304.

FEATURES: To be assembled at the end of your conveyor to help the products transfer. Low friction coefficient, minimum noise level, extremely cleanable. The versions with rollers made in stainless steel, are available both with bearings made of chrome steel or with bushings made of auto-lubricating polyamide which are suitable for applications in contact with water.

BOX QUANTITY: 8 pieces.

ON REQUEST:

- **External module and rollers:** Can be produced in other colours.
- **Box quantity:** According to your request.

Suitable for applications which require maximum smoothness.

Suitable for applications in contact with water.

Modular transfer plates

Modular transfer plates with lip
(width 115 mm 3 rows of rollers)

Part. **258**

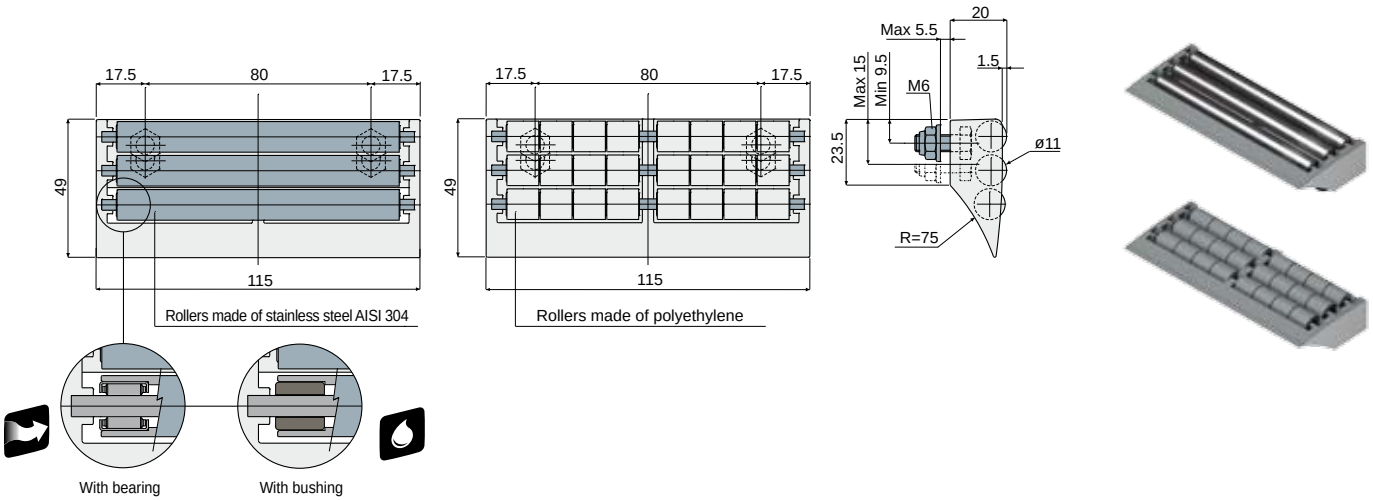

Rollers made of stainless steel AISI 304		Rollers made of polyethylene
With bearings	With bushings	
Code	Code	Code
258 / 85003	258 / 85804	258 / 82004

MATERIALS: Modular transfer plate with external module made of grey colour acetal; rollers made of grey colour polyethylene or stainless steel AISI 304; bearings made of chrome steel; bushings made of auto-lubricating polyamide; pins and fixing nuts made of stainless steel AISI 304.
FEATURES: To be assembled at the end of your conveyor to help the products transfer. Low friction coefficient, minimum noise level, extremely cleanable. The versions with rollers made in stainless steel, are available both with bearings made of chrome steel or with bushings made of auto-lubricating polyamide which are suitable for applications in contact with water.
BOX QUANTITY: 8 pieces.
ON REQUEST:
- **External module and rollers:** Can be produced in other colours.
- **Box quantity:** According to your request.

Modular transfer plates with lip
(width 115 mm 2 rows of rollers)

Part. **259**

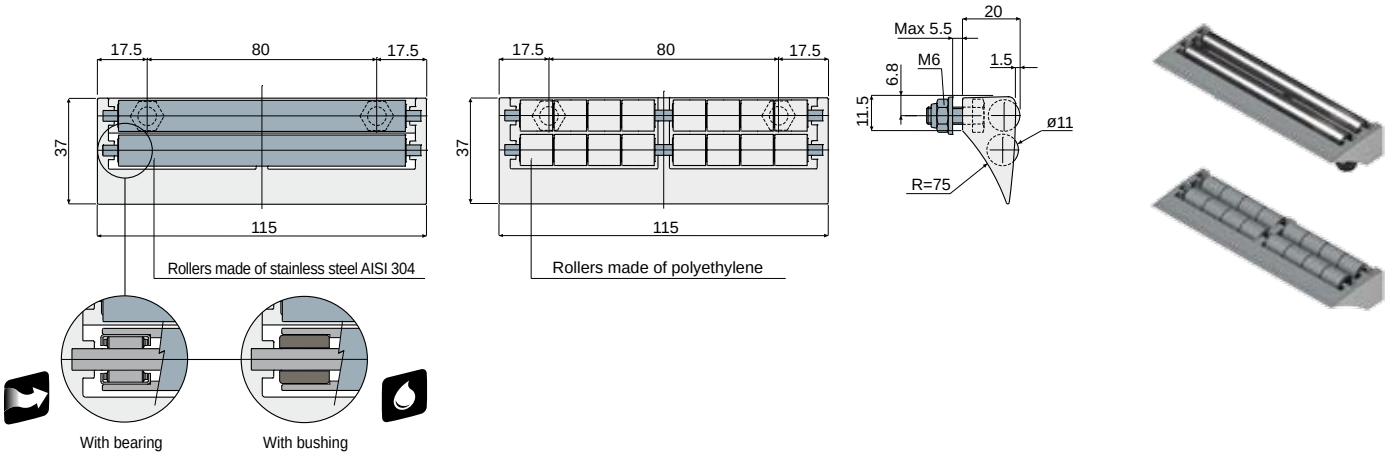

Rollers made of stainless steel AISI 304		Rollers made of polyethylene
With bearings	With bushings	
Code	Code	Code
259 / 85002	259 / 85805	259 / 82003

MATERIALS: Modular transfer plate with external module made of grey colour acetal; rollers made of grey colour polyethylene or stainless steel AISI 304; bearings made of chrome steel; bushings made of auto-lubricating polyamide; pins and fixing nuts made of stainless steel AISI 304.
FEATURES: To be assembled at the end of your conveyor to help the products transfer. Low friction coefficient, minimum noise level, extremely cleanable. The versions with rollers made in stainless steel, are available both with bearings made of chrome steel or with bushings made of auto-lubricating polyamide which are suitable for applications in contact with water.
BOX QUANTITY: 8 pieces.
ON REQUEST:
- **External module and rollers:** Can be produced in other colours.
- **Box quantity:** According to your request.

Suitable for applications which require maximum smoothness.

Suitable for applications in contact with water.

Modular transfer plates

Modular transfer plates without lip

(width 115 mm 3 rows of rollers)

Part. **430**

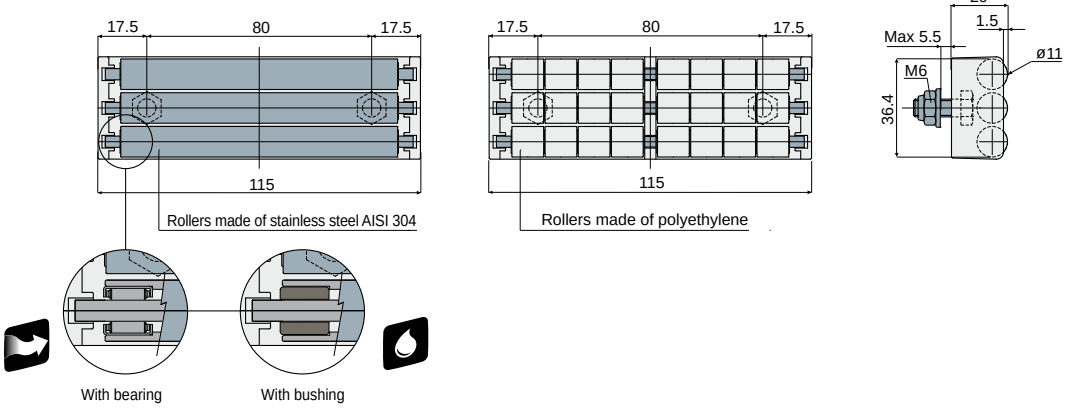

Rollers made of stainless steel AISI 304		Rollers made of polyethylene
With bearings	With bushings	
Code	Code	Code
430 / 85080	**430 / 85806**	**430 / 85084**

MATERIALS: Modular transfer plate with external module made of grey colour acetal; rollers made of grey colour polyethylene or stainless steel AISI 304; bearings made of chrome steel; bushings made of auto-lubricating polyamide; pins and fixing nuts made of stainless steel AISI 304.
FEATURES: To be assembled at the end of your conveyor to help the products transfer. Low friction coefficient, minimum noise level, extremely cleanable. The versions with rollers made in stainless steel, are available both with bearings made of chrome steel or with bushings made of auto-lubricating polyamide which are suitable for applications in contact with water.
BOX QUANTITY: 8 pieces.
ON REQUEST:

- **External module and rollers:** Can be produced in other colours.
- **Box quantity:** According to your request.

Part. **431**

Modular transfer plates without lip

(width 115 mm 2 rows of rollers)

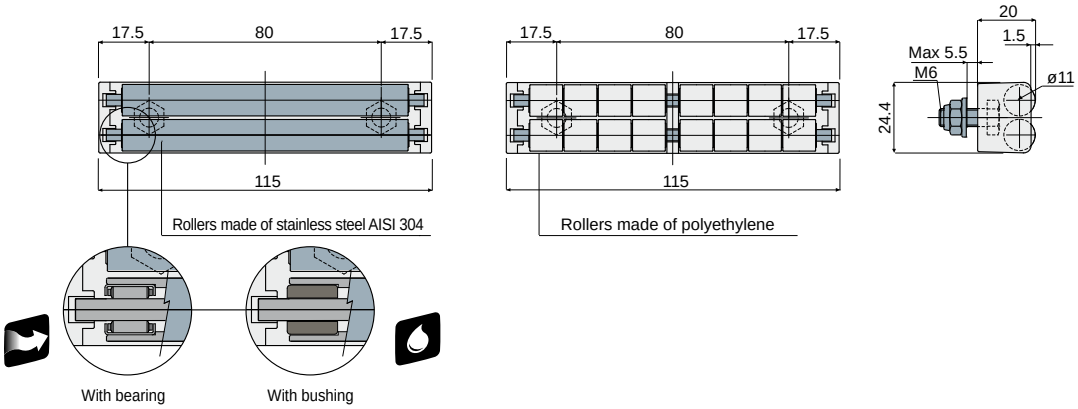

Rollers made of stainless steel AISI 304		Rollers made of polyethylene
With bearings	With bushings	
Code	Code	Code
431 / 85081	**431 / 85807**	**431 / 85085**

MATERIALS: Modular transfer plate with external module made of grey colour acetal; rollers made of grey colour polyethylene or stainless steel AISI 304; bearings made of chrome steel; bushings made of auto-lubricating polyamide; pins and fixing nuts made of stainless steel AISI 304.
FEATURES: To be assembled at the end of your conveyor to help the products transfer. Low friction coefficient, minimum noise level, extremely cleanable. The versions with rollers made in stainless steel, are available both with bearings made of chrome steel or with bushings made of auto-lubricating polyamide which are suitable for applications in contact with water.
BOX QUANTITY: 8 pieces.
ON REQUEST:

- **External module and rollers:** Can be produced in other colours.
- **Box quantity:** According to your request.

Suitable for applications which require maximum smoothness.

Suitable for applications in contact with water.

Modular transfer plates

Modular transfer plates with lip

(width 85 mm 5 rows of rollers)

Part. **260**

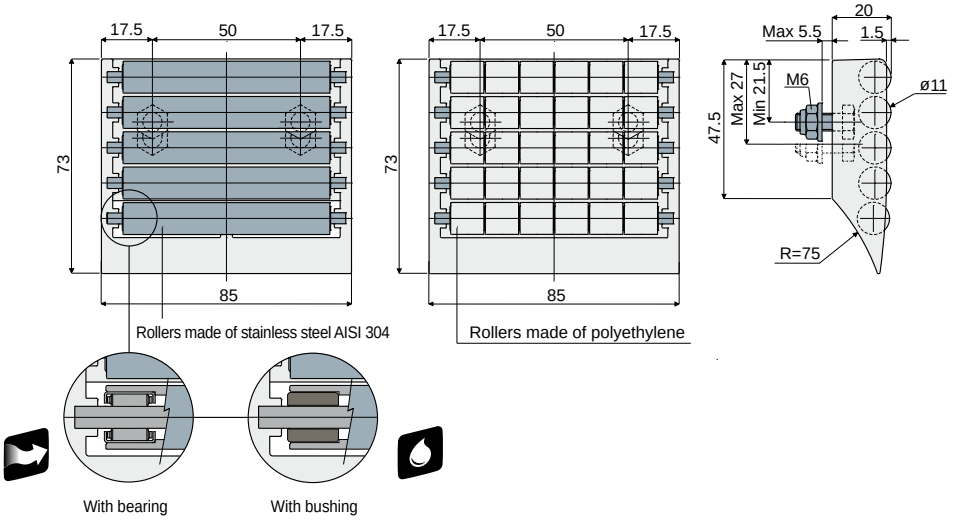

Rollers made of stainless steel AISI 304		Rollers made of polyethylene
With bearings	With bushings	
Code	Code	Code
260 / 85007	260 / 85808	260 / 82002

MATERIALS: Modular transfer plate with external module made of grey colour acetal; rollers made of grey colour polyethylene or stainless steel AISI 304; bearings made of chrome steel; bushings made of auto-lubricating polyamide; pins and fixing nuts made of stainless steel AISI 304.
FEATURES: To be assembled at the end of your conveyor to help the products transfer. Low friction coefficient, minimum noise level, extremely cleanable. The versions with rollers made in stainless steel, are available both with bearings made of chrome steel or with bushings made of auto-lubricating polyamide which are suitable for applications in contact with water.
BOX QUANTITY: 8 pieces.
ON REQUEST:

- **External module and rollers:** Can be produced in other colours.
- **Box quantity:** According to your request.

Modular transfer plates with lip

(width 85 mm 4 rows of rollers)

Part. **416**

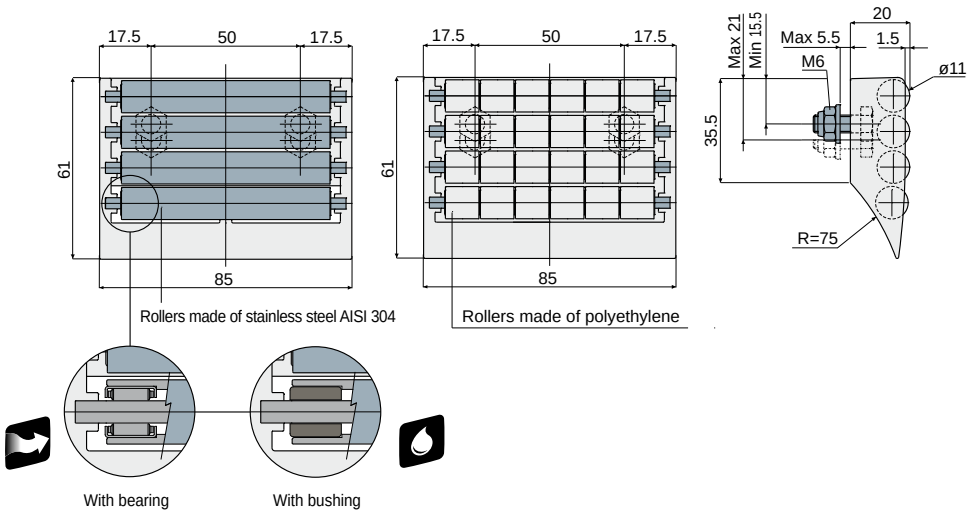

Rollers made of stainless steel AISI 304		Rollers made of polyethylene
With bearings	With bushings	
Code	Code	Code
416 / 85032	416 / 85809	416 / 84575

MATERIALS: Modular transfer plate with external module made of grey colour acetal; rollers made of grey colour polyethylene or stainless steel AISI 304; bearings made of chrome steel; bushings made of auto-lubricating polyamide; pins and fixing nuts made of stainless steel AISI 304.
FEATURES: To be assembled at the end of your conveyor to help the products transfer. Low friction coefficient, minimum noise level, extremely cleanable. The versions with rollers made in stainless steel, are available both with bearings made of chrome steel or with bushings made of auto-lubricating polyamide which are suitable for applications in contact with water.
BOX QUANTITY: 8 pieces.
ON REQUEST:

- **External module and rollers:** Can be produced in other colours.
- **Box quantity:** According to your request.

Suitable for applications which require maximum smoothness.

Suitable for applications in contact with water.

Modular transfer plates

Part. 261 Modular transfer plates with lip
(width 85 mm 3 rows of rollers)

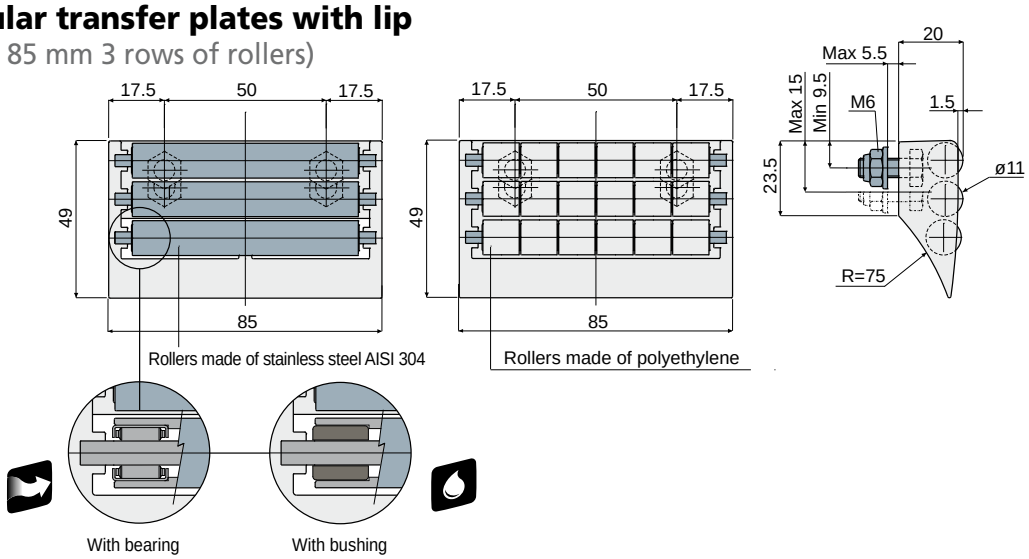

Rollers made of stainless steel AISI 304		Rollers made of polyethylene
With bearings	With bushings	
Code	Code	Code
261 / 85006	261 / 85810	261 / 82001

MATERIALS: Modular transfer plate with external module made of grey colour acetal; rollers made of grey colour polyethylene or stainless steel AISI 304; bearings made of chrome steel; bushings made of auto-lubricating polyamide; pins and fixing nuts made of stainless steel AISI 304.
FEATURES: To be assembled at the end of your conveyor to help the products transfer. Low friction coefficient, minimum noise level, extremely cleanable. The versions with rollers made in stainless steel, are available both with bearings made of chrome steel or with bushings made of auto-lubricating polyamide which are suitable for applications in contact with water.
BOX QUANTITY: 8 pieces.
ON REQUEST:
- **External module and rollers:** Can be produced in other colours.
- **Box quantity:** According to your request.

Part. 262 Modular transfer plates with lip
(width 85 mm 2 rows of rollers)

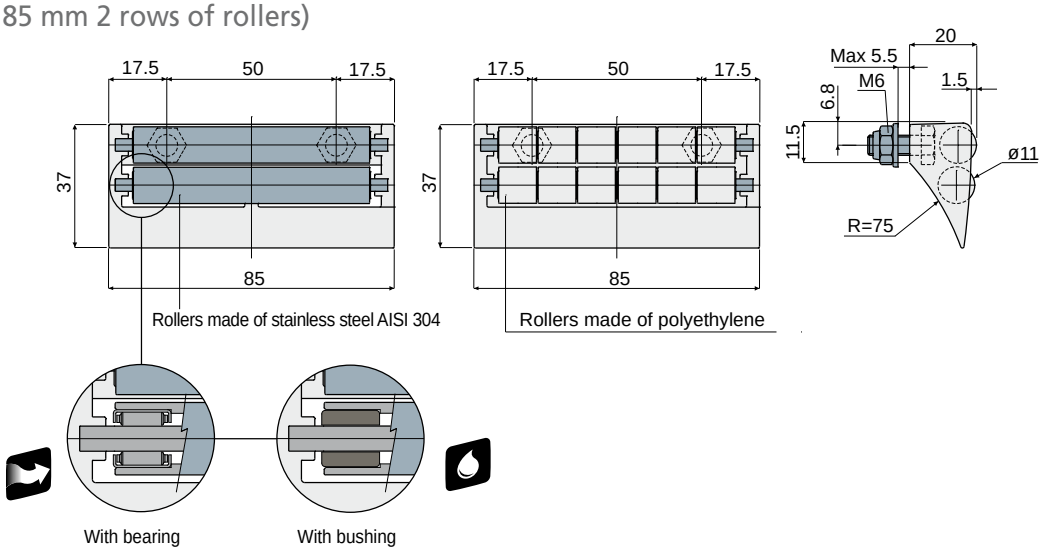

Rollers made of stainless steel AISI 304		Rollers made of polyethylene
With bearings	With bushings	
Code	Code	Code
262 / 85005	262 / 85811	262 / 82000

MATERIALS: Modular transfer plate with external module made of grey colour acetal; rollers made of grey colour polyethylene or stainless steel AISI 304; bearings made of chrome steel; bushings made of auto-lubricating polyamide; pins and fixing nuts made of stainless steel AISI 304.
FEATURES: To be assembled at the end of your conveyor to help the products transfer. Low friction coefficient, minimum noise level, extremely cleanable. The versions with rollers made in stainless steel, are available both with bearings made of chrome steel or with bushings made of auto-lubricating polyamide which are suitable for applications in contact with water.
BOX QUANTITY: 8 pieces.
ON REQUEST:
- **External module and rollers:** Can be produced in other colours.
- **Box quantity:** According to your request.

Suitable for applications which require maximum smoothness.

Suitable for applications in contact with water.

Modular transfer plates

Modular transfer plates without lip
(width 85 mm 3 rows of rollers)

Part. **432**

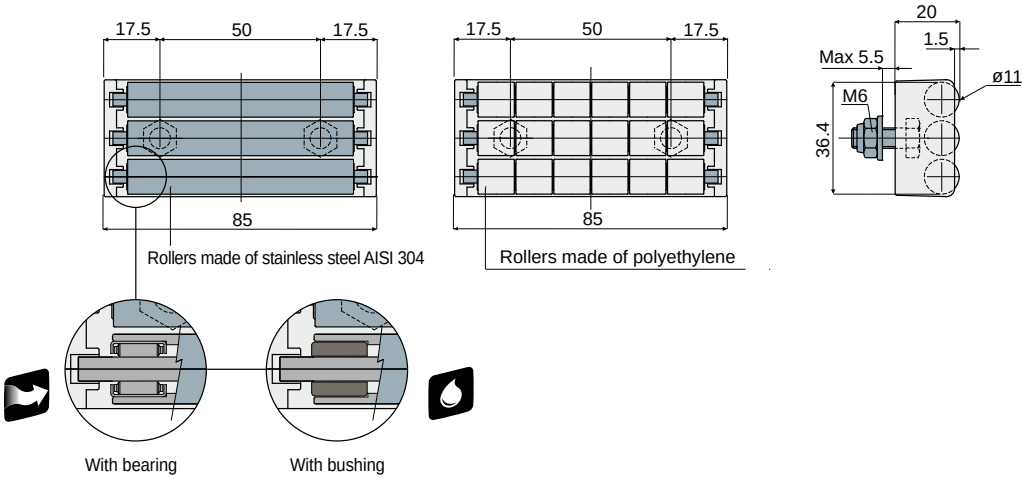

Rollers made of stainless steel AISI 304		Rollers made of polyethylene
With bearings	With bushings	
Code	Code	Code
432 / 85082	432 / 85812	432 / 85086

MATERIALS: Modular transfer plate with external module made of grey colour acetal; rollers made of grey colour polyethylene or stainless steel AISI 304; bearings made of chrome steel; bushings made of auto-lubricating polyamide; pins and fixing nuts made of stainless steel AISI 304.
FEATURES: To be assembled at the end of your conveyor to help the products transfer. Low friction coefficient, minimum noise level, extremely cleanable. The versions with rollers made in stainless steel, are available both with bearings made of chrome steel or with bushings made of auto-lubricating polyamide which are suitable for applications in contact with water.
BOX QUANTITY: 8 pieces.
ON REQUEST:
- **External module and rollers:** Can be produced in other colours.
- **Box quantity:** According to your request.

Modular transfer plates without lip
(width 85 mm 2 rows of rollers)

Part. **433**

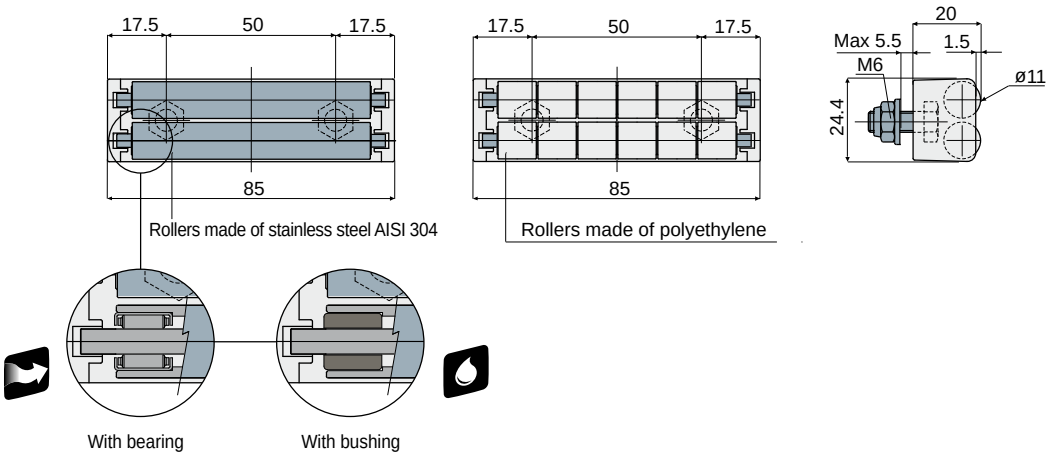

Rollers made of stainless steel AISI 304		Rollers made of polyethylene
With bearings	With bushings	
Code	Code	Code
433 / 85083	433 / 85813	433 / 85087

MATERIALS: Modular transfer plate with external module made of grey colour acetal; rollers made of grey colour polyethylene or stainless steel AISI 304; bearings made of chrome steel; bushings made of auto-lubricating polyamide; pins and fixing nuts made of stainless steel AISI 304.
FEATURES: To be assembled at the end of your conveyor to help the products transfer. Low friction coefficient, minimum noise level, extremely cleanable. The versions with rollers made in stainless steel, are available both with bearings made of chrome steel or with bushings made of auto-lubricating polyamide which are suitable for applications in contact with water.
BOX QUANTITY: 8 pieces.
ON REQUEST:
- **External module and rollers:** Can be produced in other colours.
- **Box quantity:** According to your request.

Suitable for applications which require maximum smoothness.

Suitable for applications in contact with water.

Product guides and accessories

Part. 306 Roller side guide with pearls
(single type, pitch of the rollers: 12 mm.)

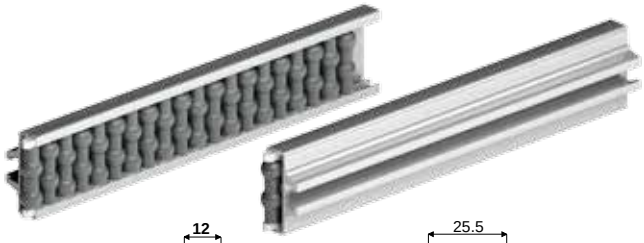

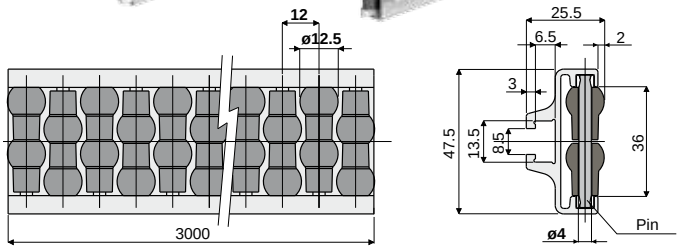

Pins made of acetal	Pins made of stainless steel AISI 304
Code	Code
306 / 82809	306 / 84548

MATERIALS: Metal profile in anodized aluminium; rollers in grey polyethylene; support pins in white acetal or in stainless steel AISI 304.

FEATURES: Supplied already assembled, in bars of 3 meters length.
Min. curvature radius: 250 mm.

BOX QUANTITY: 2 bars of 3 meters (total 6 meters).

ON REQUEST:

- Roller side guide: Other colours.

Example of application

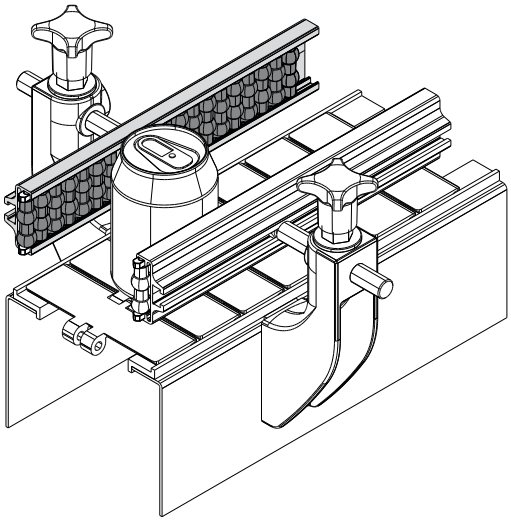

Part. 307 Roller side guide with pearls
(double type, pitch of the rollers: 12 mm.)

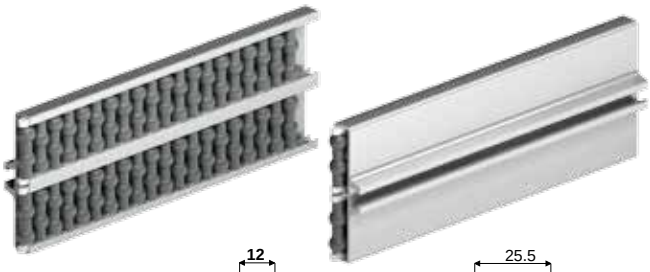

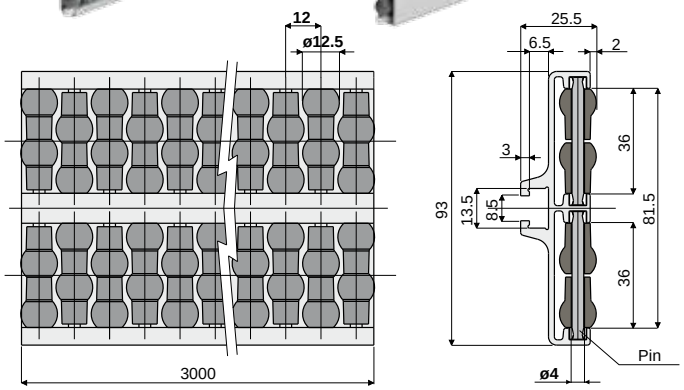

Pins made of acetal	Pins made of stainless steel AISI 304
Code	Code
307 / 82810	307 / 84549

MATERIALS: Metal profile in anodized aluminium; rollers in grey polyethylene; support pins in white acetal or in stainless steel AISI 304.

FEATURES: Supplied already assembled, in bars of 3 meters length.
Min. curvature radius: 500 mm.

BOX QUANTITY: 2 bars of 3 meters (total 6 meters).

ON REQUEST:

- Roller side guide: Other colours.

Example of application

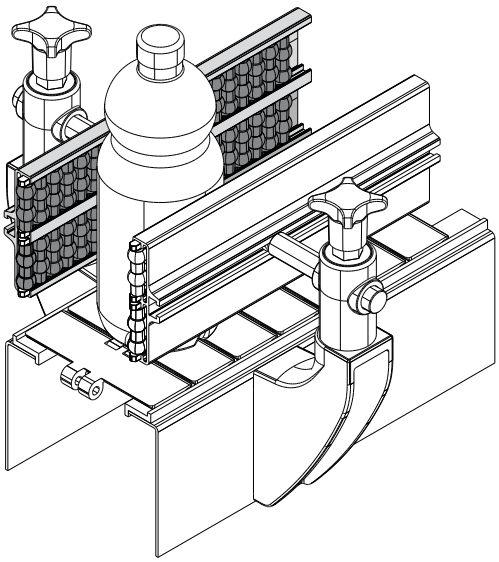

Suitable for applications which require maximum robustness.

Product guides and accessories

Roller central guide with pearls
(single type, pitch of the rollers: 12 mm.)

Part. **308**

Example of application

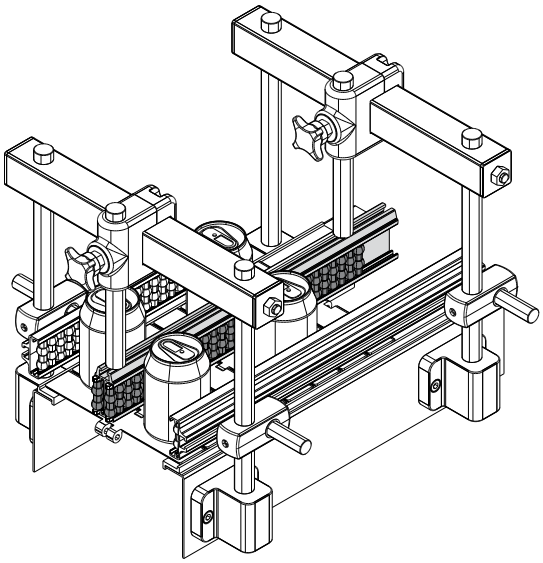

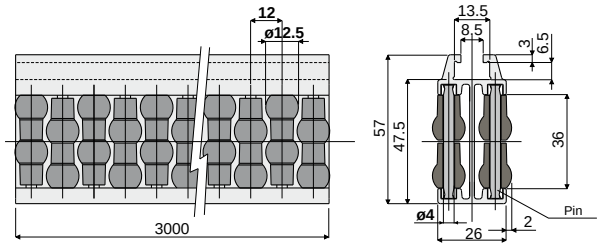

Pins made of acetal	Pins made of stainless steel AISI 304
Code	Code
308 / 82811	308 / 84550

MATERIALS: Metal profile in anodized aluminium; rollers in grey polyethylene; support pins in white acetal or in stainless steel AISI 304.

FEATURES: Supplied already assembled, in bars of 3 meters length.
Min. curvature radius: 500 mm.

BOX QUANTITY: 2 bars of 3 meters (total 6 meters).

ON REQUEST:

- **Roller central guide:** Other colours.

Roller central guide with pearls
(double type, pitch of the rollers: 12 mm.)

Part. **319**

Example of application

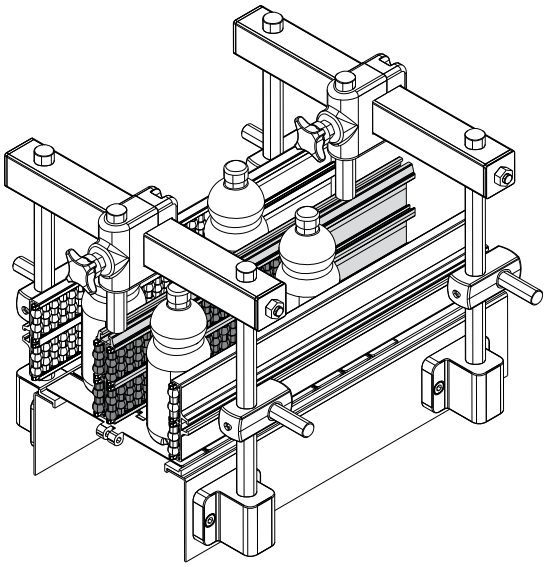

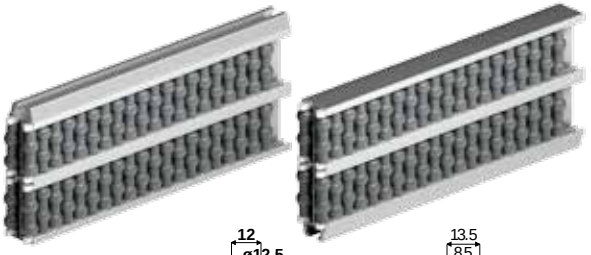

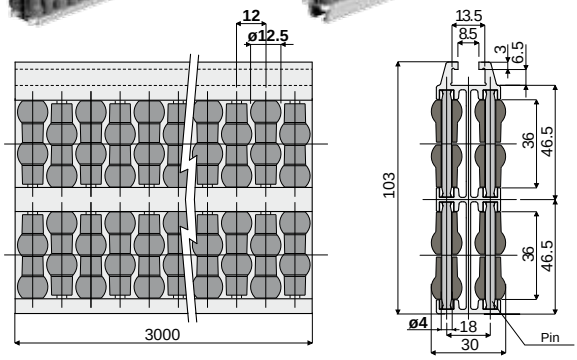

Pins made of acetal	Pins made of stainless steel AISI 304
Code	Code
319 / 82916	319 / 84551

MATERIALS: Metal profile in anodized aluminium; rollers in grey polyethylene; support pins in white acetal or in stainless steel AISI 304.

FEATURES: Supplied already assembled, in bars of 3 meters length.
Min. curvature radius: 750 mm.

BOX QUANTITY: 2 bars of 3 meters (total 6 meters).

ON REQUEST:

- **Roller central guide:** Other colours.

Suitable for applications which require maximum robustness.

Product guides and accessories

Part. 468 Roller side guide with pearls
(single type, pitch of the rollers: 9.3 mm.)

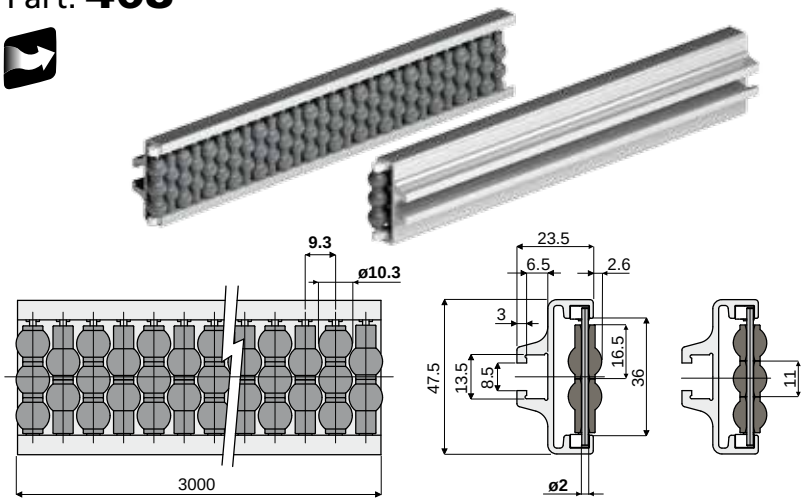

Code
468 / 85585

MATERIALS: Metal profile in anodized aluminium; rollers in grey polyethylene; support pins in stainless steel AISI 304.

FEATURES: The reduced pitch of the rollers guarantees the maximum smoothness of the product. Supplied already assembled, in bars of 3 meters length. Min. curvature radius: 250 mm.

BOX QUANTITY: 2 bars of 3 meters (total 6 meters).

ON REQUEST:

- Roller side guide: Other colours.

Example of application

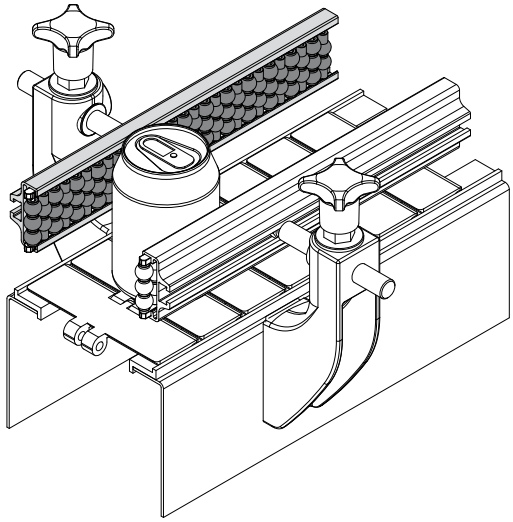

Part. 474 Roller side guide with pearls
(double type, pitch of the rollers: 9.3 mm.)

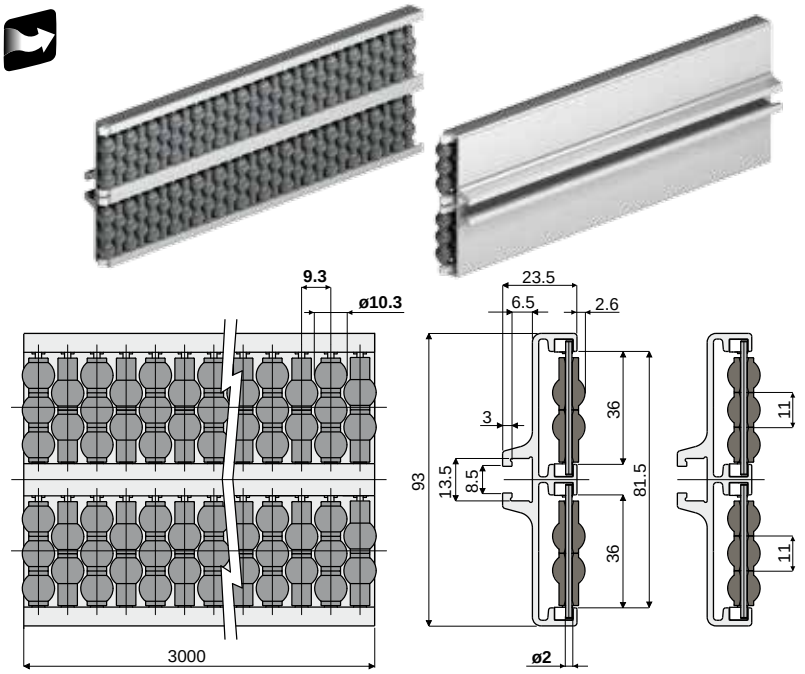

Code
474 / 85978

MATERIALS: Metal profile in anodized aluminium; rollers in grey polyethylene; support pins in stainless steel AISI 304.

FEATURES: The reduced pitch of the rollers guarantees the maximum smoothness of the product. Supplied already assembled, in bars of 3 meters length. Min. curvature radius: 500 mm.

BOX QUANTITY: 2 bars of 3 meters (total 6 meters).

ON REQUEST:

- Roller side guide: Other colours.

Example of application

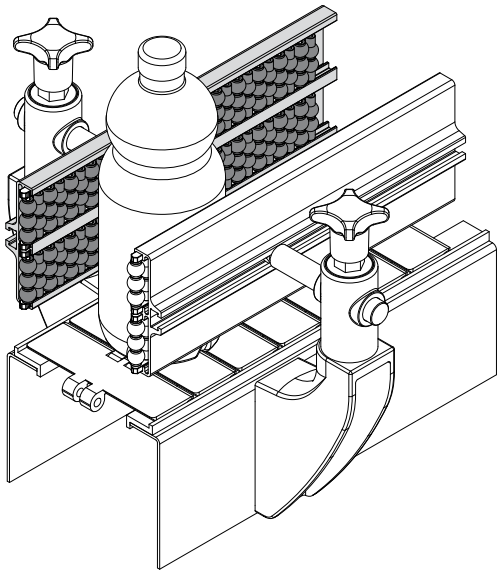

Suitable for applications which require maximum smoothness.

Product guides and accessories

Roller central guide with pearls

(single type, pitch of the rollers: 9.3 mm.)

Part. **475**

Example of application

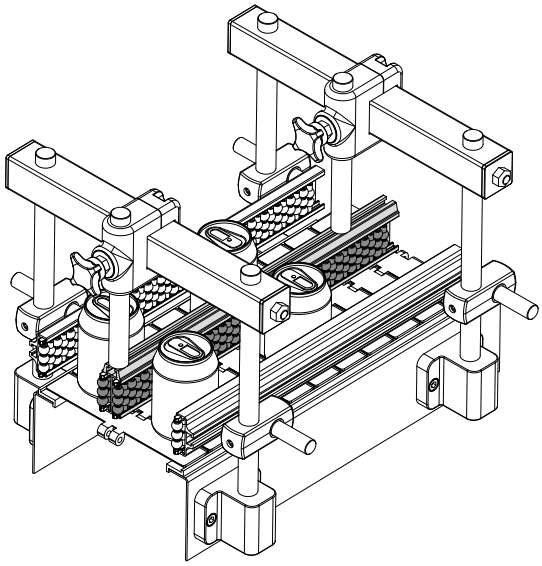

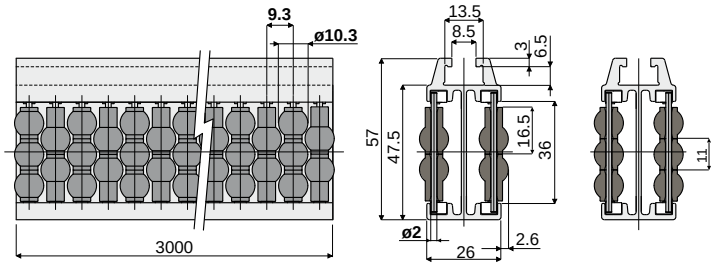

Code
475 / 85979

MATERIALS: Metal profile in anodized aluminium; rollers in grey polyethylene; support pins in stainless steel AISI 304.

FEATURES: The reduced pitch of the rollers guarantees the maximum smoothness of the product. Supplied already assembled, in bars of 3 meters length. Min. curvature radius: 500 mm.

BOX QUANTITY: 2 bars of 3 meters (total 6 meters).

ON REQUEST:

- **Roller central guide:** Other colours.

Roller central guide with pearls

(double type, pitch of the rollers: 9.3 mm.)

Part. **476**

Example of application

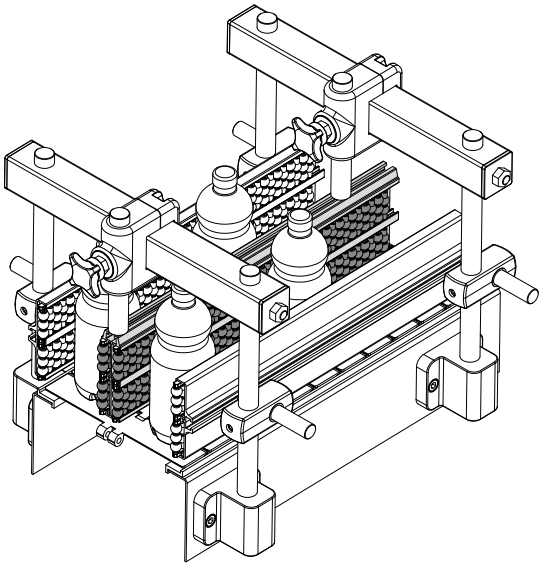

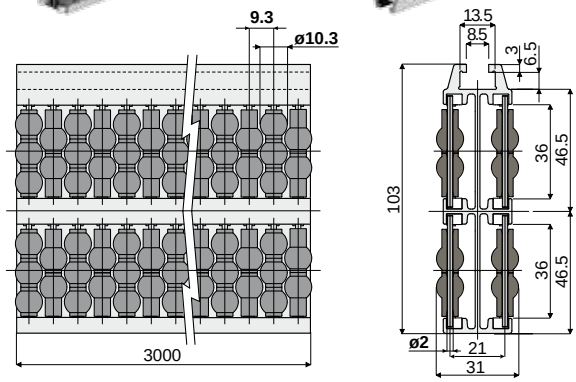

Code
476 / 85980

MATERIALS: Metal profile in anodized aluminium; rollers in grey polyethylene; support pins in stainless steel AISI 304.

FEATURES: The reduced pitch of the rollers guarantees the maximum smoothness of the product. Supplied already assembled, in bars of 3 meters length. Min. curvature radius: 750 mm.

BOX QUANTITY: 2 bars of 3 meters (total 6 meters).

ON REQUEST:

- **Roller central guide:** Other colours.

Suitable for applications which require maximum smoothness.

Product guides and accessories

Part. 325 Roller side guide with cylinders
(single type, pitch of the rollers: 12 mm.)

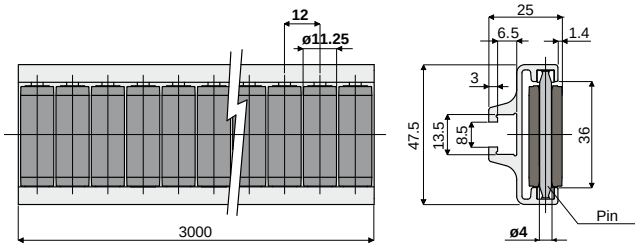

Pins made of acetal	Pins made of stainless steel AISI 304
Code	Code
325 / 83003	325 / 84552

MATERIALS: Metal profile in anodized aluminium; rollers in grey polyethylene; support pins in white acetal or in stainless steel AISI 304.
FEATURES: Supplied already assembled, in bars of 3 meters length.
Min. curvature radius: 250 mm.
BOX QUANTITY: 2 bars of 3 meters (total 6 meters).
ON REQUEST:
- **Roller side guide:** Other colours.

Example of application

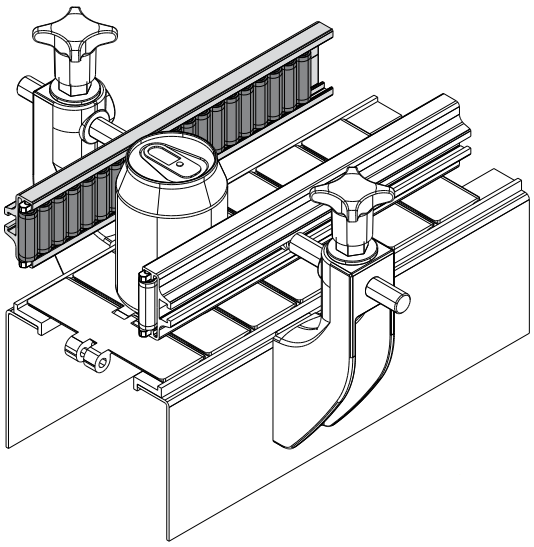

Part. 326 Roller side guide with cylinders
(double type, pitch of the rollers: 12 mm.)

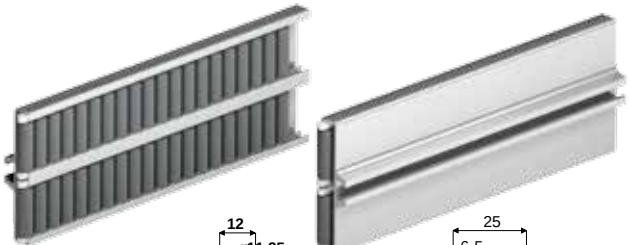

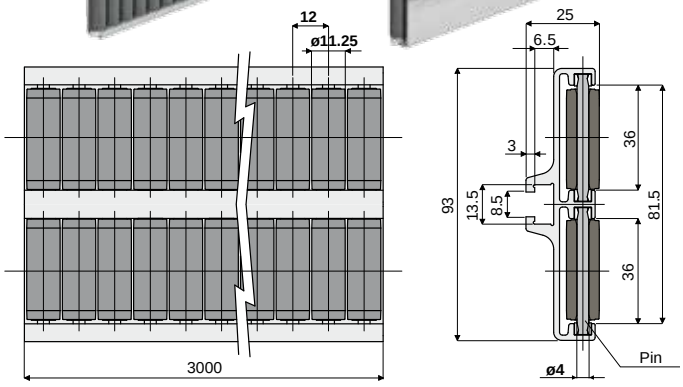

Pins made of acetal	Pins made of stainless steel AISI 304
Code	Code
326 / 83004	326 / 84553

MATERIALS: Metal profile in anodized aluminium; rollers in grey polyethylene; support pins in white acetal or in stainless steel AISI 304.
FEATURES: Supplied already assembled, in bars of 3 meters length.
Min. curvature radius: 500 mm.
BOX QUANTITY: 2 bars of 3 meters (total 6 meters).
ON REQUEST:
- **Roller side guide:** Other colours.

Example of application

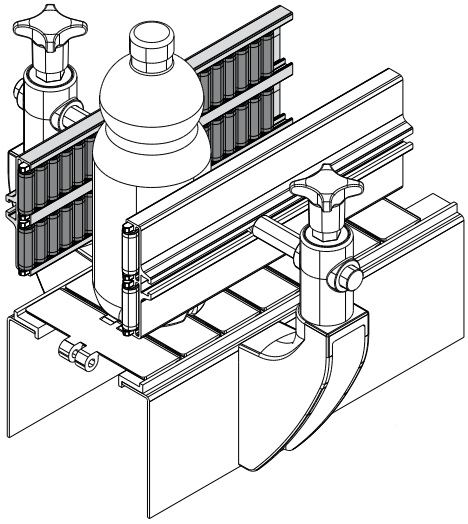

Suitable for applications which require maximum robustness.

Product guides and accessories

Roller central guide with cylinders
(single type, pitch of the rollers: 12 mm.)

Part. **327**

Example of application

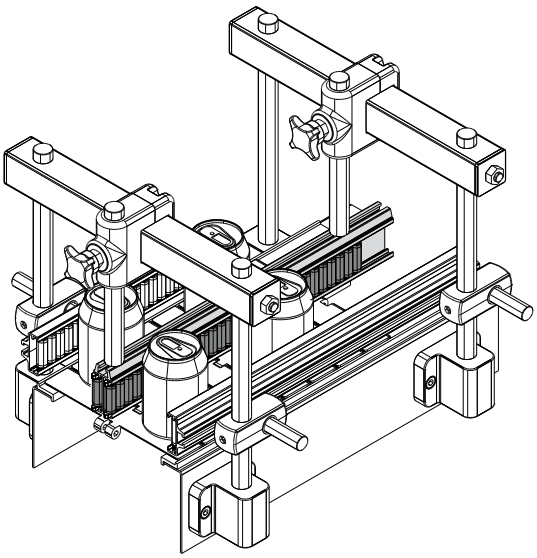

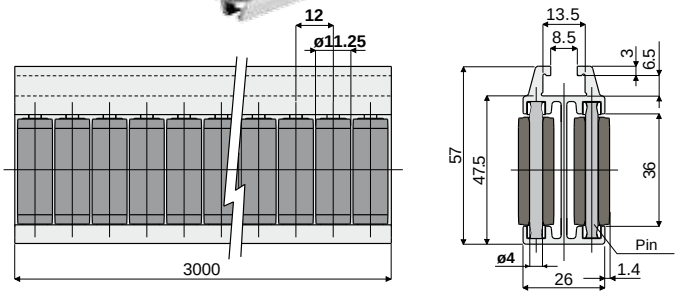

Pins made of acetal	Pins made of stainless steel AISI 304
Code	Code
327 / 83005	327 / 84555

MATERIALS: Metal profile in anodized aluminium; rollers in grey polyethylene; support pins in white acetal or in stainless steel AISI 304.

FEATURES: Supplied already assembled, in bars of 3 meters length.
Min. curvature radius: 500 mm.

BOX QUANTITY: 2 bars of 3 meters (total 6 meters).

ON REQUEST:

- **Roller central guide:** Other colours.

Roller central guide with cylinders
(double type, pitch of the rollers: 12 mm.)

Part. **328**

Example of application

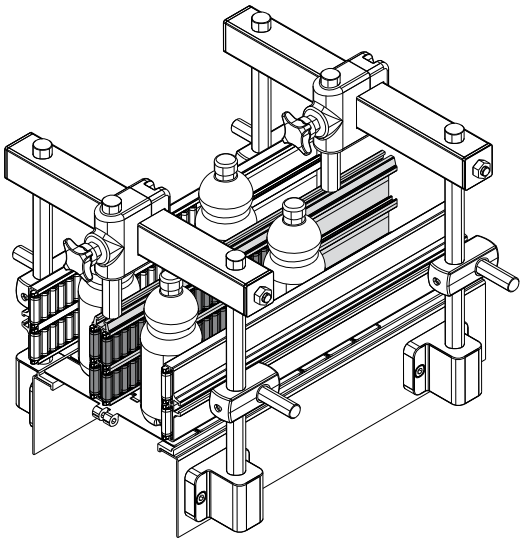

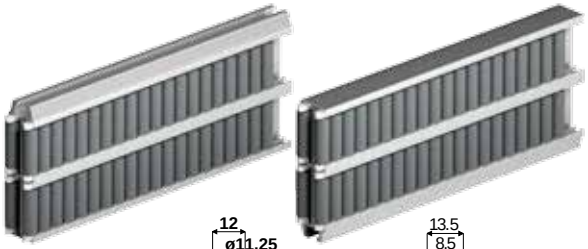

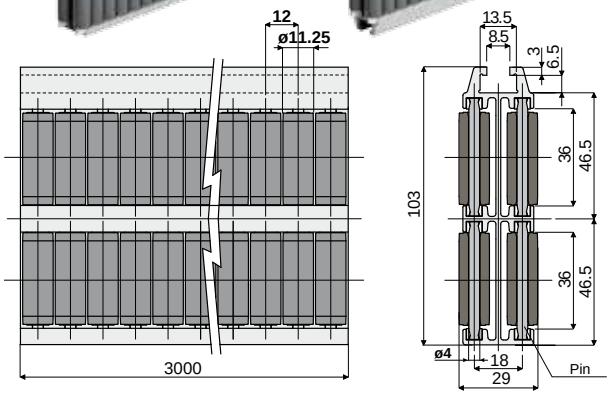

Pins made of acetal	Pins made of stainless steel AISI 304
Code	Code
328 / 83006	328 / 84556

MATERIALS: Metal profile in anodized aluminium; rollers in grey polyethylene; support pins in white acetal or in stainless steel AISI 304.

FEATURES: Supplied already assembled, in bars of 3 meters length.
Min. curvature radius: 750 mm.

BOX QUANTITY: 2 bars of 3 meters (total 6 meters).

ON REQUEST:

- **Roller central guide:** Other colours.

Suitable for applications which require maximum robustness.

Product guides and accessories

Part. 467 Roller side guide with rubberised cylinders
(single type, pitch of the rollers: 9.3 mm.)

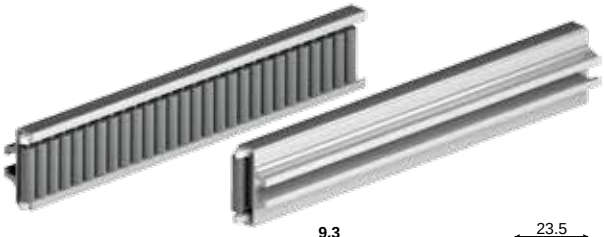

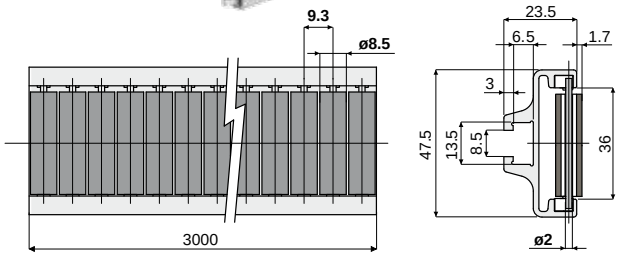

Code
467 / 85584

MATERIALS: Metal profile in anodized aluminium; rollers in polyethylene and grey colour rubber; support pins in stainless steel AISI 304.
FEATURES: The rubberised surface of the rollers guarantees a lower noise level.
Supplied already assembled, in bars of 3 meters length.
Min. curvature radius: 250 mm.
BOX QUANTITY: 2 bars of 3 meters (total 6 meters).
ON REQUEST:
- Roller side guide: Other colours.

Example of application

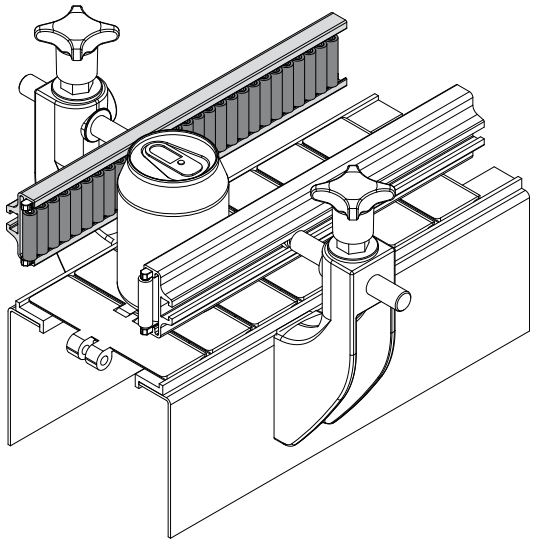

Part. 477 Roller side guide with rubberised cylinders
(double type, pitch of the rollers: 9.3 mm.)

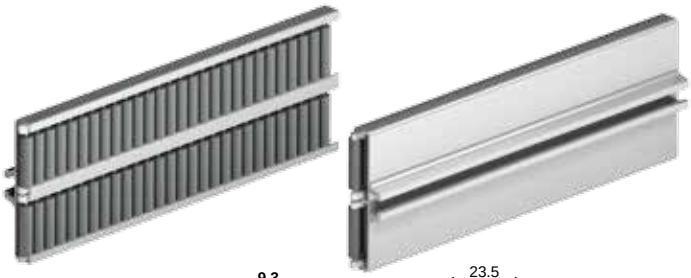

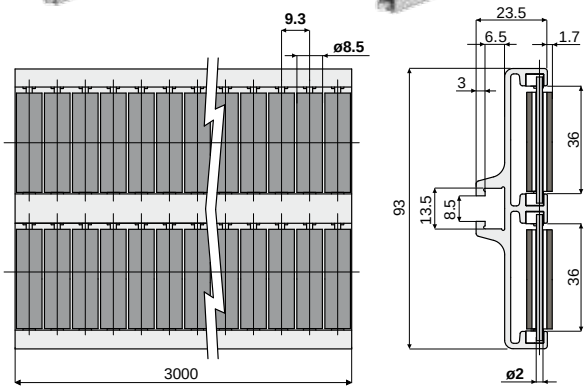

Code
477 / 85981

MATERIALS: Metal profile in anodized aluminium; rollers in polyethylene and grey colour rubber; support pins in stainless steel AISI 304.
FEATURES: The rubberised surface of the rollers guarantees a lower noise level.
Supplied already assembled, in bars of 3 meters length.
Min. curvature radius: 500 mm.
BOX QUANTITY: 2 bars of 3 meters (total 6 meters).
ON REQUEST:
- Roller side guide: Other colours.

Example of application

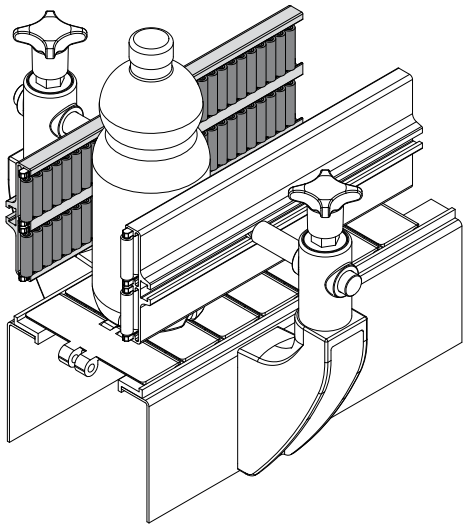

Suitable for applications which require low noise levels.

Product guides and accessories

Roller central guide with rubberised cylinders
(single type, pitch of the rollers: 9.3 mm.)

Part. **478**

Example of application

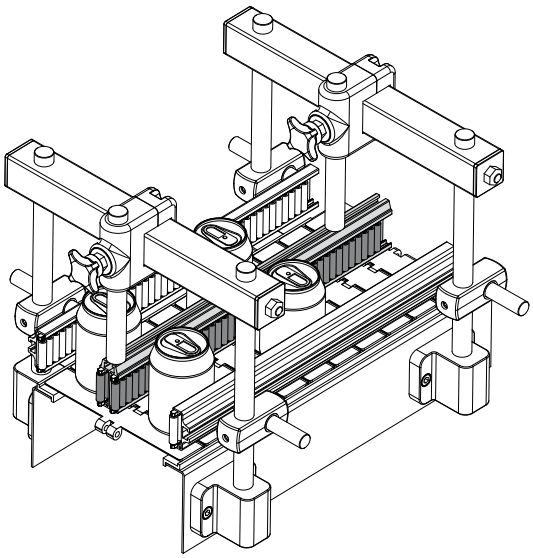

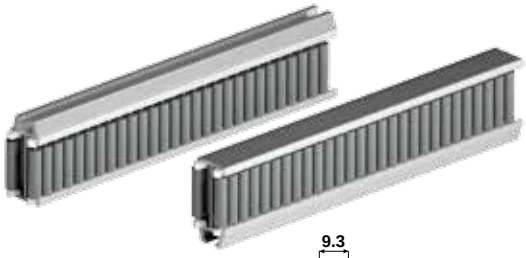

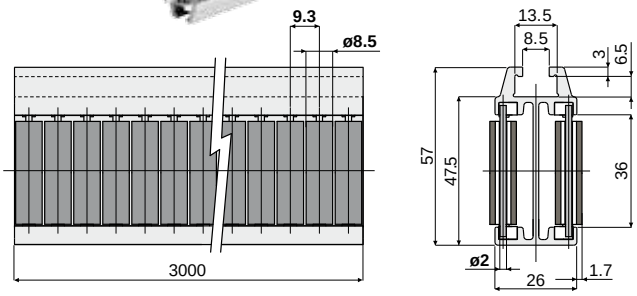

Code
478 / 85982

MATERIALS: Metal profile in anodized aluminium; rollers in polyethylene and grey colour rubber; support pins in stainless steel AISI 304.
FEATURES: The rubberised surface of the rollers guarantees a lower noise level.
Supplied already assembled, in bars of 3 meters length.
Min. curvature radius: 500 mm.
BOX QUANTITY: 2 bars of 3 meters (total 6 meters).
ON REQUEST:
- Roller central guide: Other colours.

Roller central guide with rubberised cylinders
(double type, pitch of the rollers: 9.3 mm.)

Part. **479**

Example of application

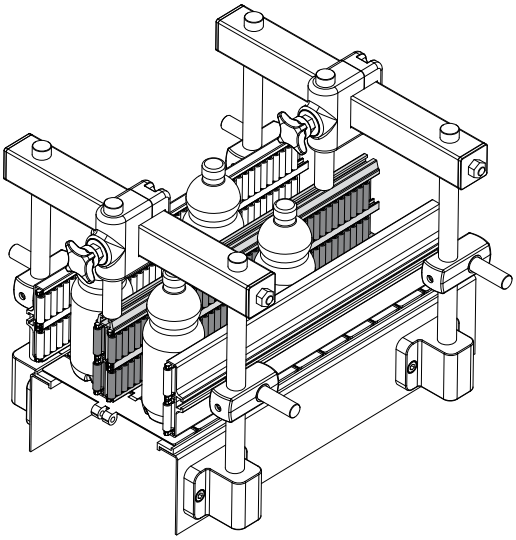

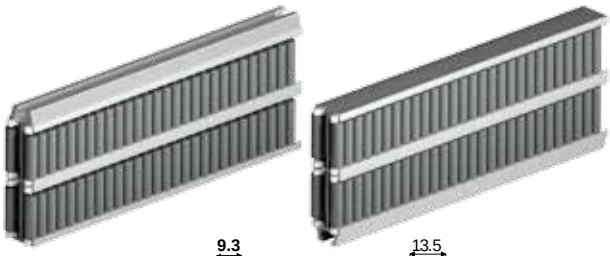

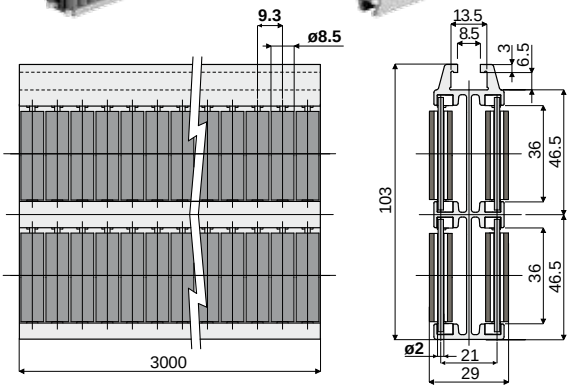

Code
479 / 85983

MATERIALS: Metal profile in anodized aluminium; rollers in polyethylene and grey colour rubber; support pins in stainless steel AISI 304.
FEATURES: The rubberised surface of the rollers guarantees a lower noise level.
Supplied already assembled, in bars of 3 meters length.
Min. curvature radius: 750 mm.
BOX QUANTITY: 2 bars of 3 meters (total 6 meters).
ON REQUEST:
- Roller central guide: Other colours.

Suitable for applications which require low noise levels.

Product guides and accessories

Part. 355 Roller side guide with round rollers
(single type, pitch of the rollers: 12 mm.)

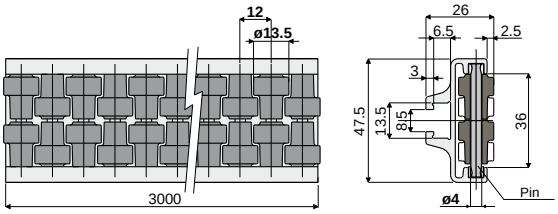

Pins made of acetal	Pins made of stainless steel AISI 304
Code	Code
355 / 83473	355 / 84557

MATERIALS: Metal profile in anodized aluminium; rollers in grey polyethylene; support pins in white acetal or in stainless steel AISI 304.
FEATURES: Supplied already assembled, in bars of 3 meters length.
Min. curvature radius: 250 mm.
BOX QUANTITY: 2 bars of 3 meters (total 6 meters).
ON REQUEST:
- Roller side guide: Other colours.

Example of application

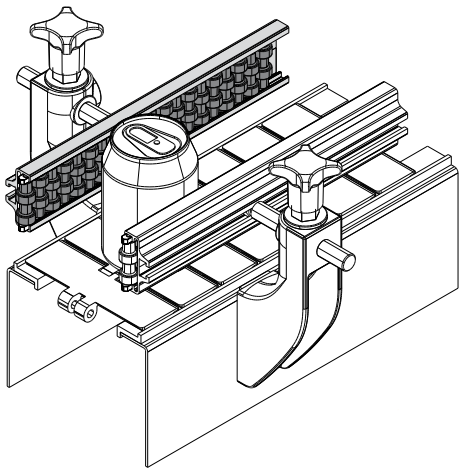

Part. 356 Roller side guide with round rollers
(double type, pitch of the rollers: 12 mm.)

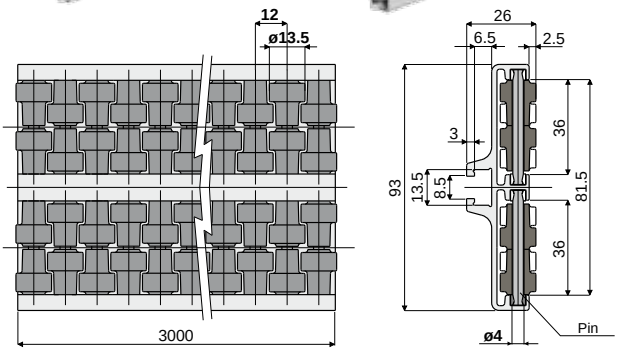

Pins made of acetal	Pins made of stainless steel AISI 304
Code	Code
356 / 83474	356 / 84558

MATERIALS: Metal profile in anodized aluminium; rollers in grey polyethylene; support pins in white acetal or in stainless steel AISI 304.
FEATURES: Supplied already assembled, in bars of 3 meters length.
Min. curvature radius: 500 mm.
BOX QUANTITY: 2 bars of 3 meters (total 6 meters).
ON REQUEST:
- Roller side guide: Other colours.

Example of application

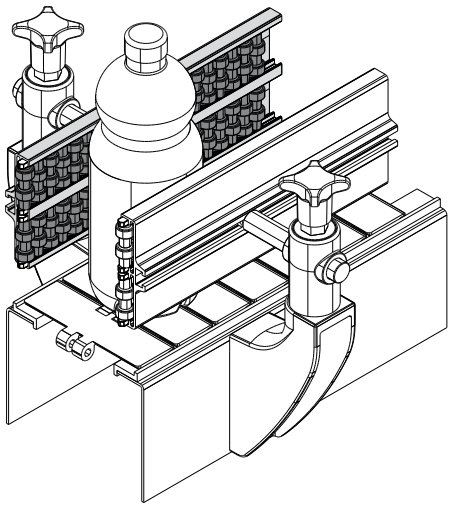

Suitable for applications which require maximum robustness.

Product guides and accessories

Roller central guide with round rollers
(single type, pitch of the rollers: 12 mm.)

Part. **357**

Example of application

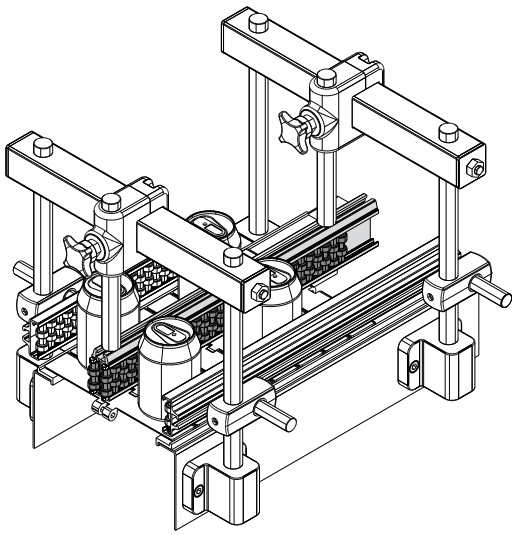

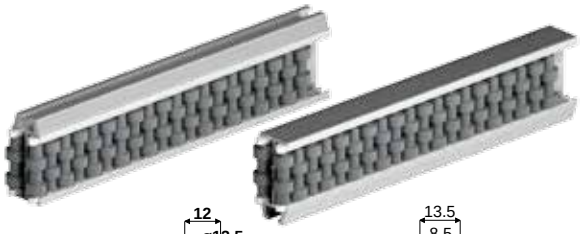

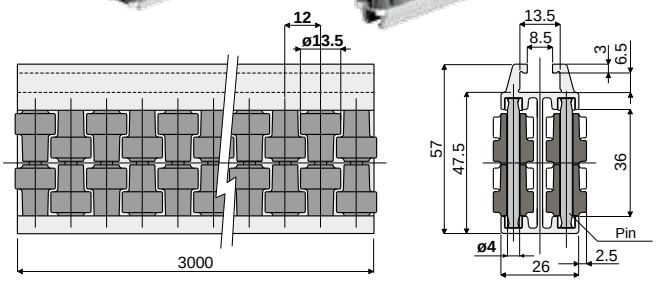

Pins made of acetal	Pins made of stainless steel AISI 304
Code	Code
357 / 83475	357 / 84559

MATERIALS: Metal profile in anodized aluminium; rollers in grey polyethylene; support pins in white acetal or in stainless steel AISI 304.

FEATURES: Supplied already assembled, in bars of 3 meters length.
Min. curvature radius: 500 mm.

BOX QUANTITY: 2 bars of 3 meters (total 6 meters).

ON REQUEST:

- **Roller central guide:** Other colours.

Roller central guide with round rollers
(double type, pitch of the rollers: 12 mm.)

Part. **358**

Example of application

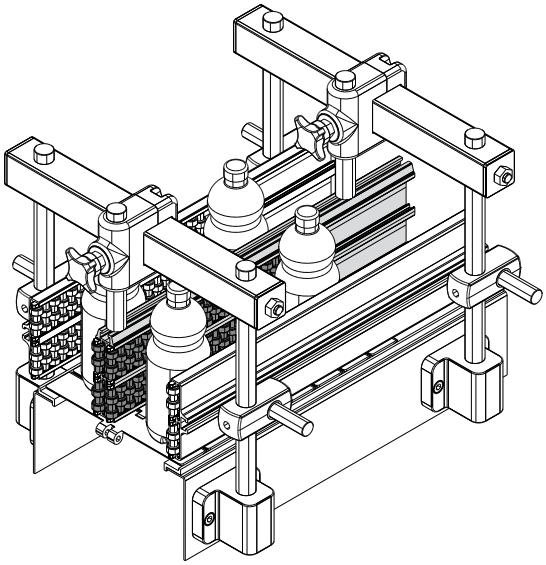

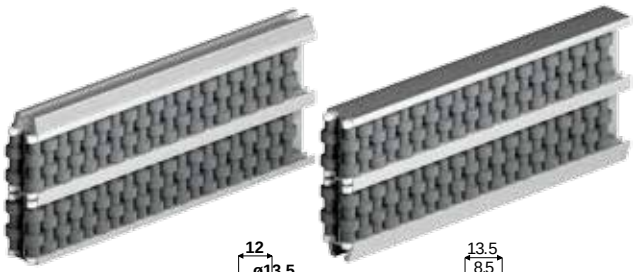

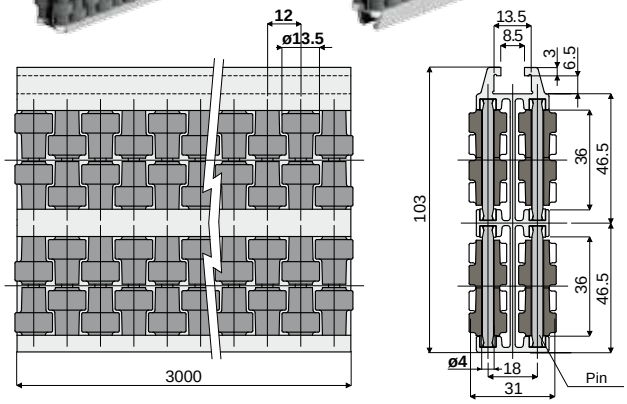

Pins made of acetal	Pins made of stainless steel AISI 304
Code	Code
358 / 83476	358 / 84560

MATERIALS: Metal profile in anodized aluminium; rollers in grey polyethylene; support pins in white acetal or in stainless steel AISI 304.

FEATURES: Supplied already assembled, in bars of 3 meters length.
Min. curvature radius: 750 mm.

BOX QUANTITY: 2 bars of 3 meters (total 6 meters).

ON REQUEST:

- **Roller central guide:** Other colours.

Suitable for applications which require maximum robustness.

Product guides and accessories

Part. 464 Side guide (single type)

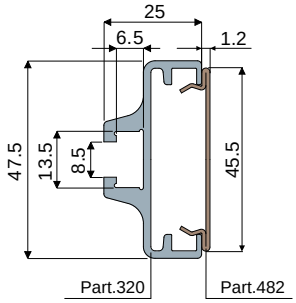

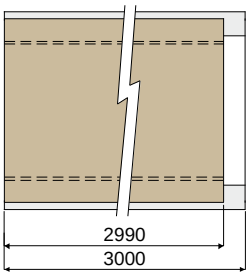

Code
464 / 85561

MATERIALS: Metal profile in anodized aluminium; guide profile in stainless steel AISI 304 covered with peek.
FEATURES: Suitable for use with bundles covered with shrink-wrapped polyethylene film. The coating with peek guarantees maximum smoothness of the product. Suitable for high temperatures applications. Peek covering thickness: min. 40 µ, max 50 µ. Supplied already assembled, in bars of 3 meters length.
BOX QUANTITY: 2 bars of 3 meters (total 6 meters).

Part. 480 Central guide (single type)

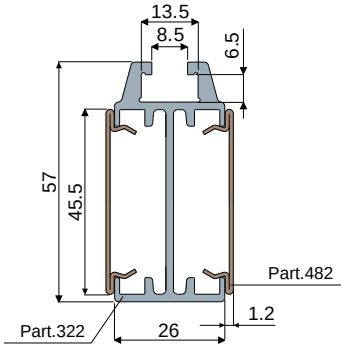

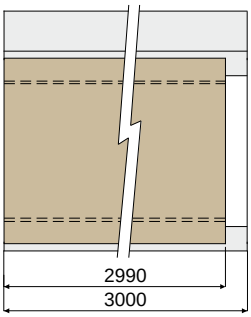

Code
480 / 86696

MATERIALS: Metal profile in anodized aluminium; guide profile in stainless steel AISI 304 covered with peek.
FEATURES: Suitable for use with bundles covered with shrink-wrapped polyethylene film. The coating with peek guarantees maximum smoothness of the product. Suitable for high temperatures applications. Peek covering thickness: min. 40 µ, max 50 µ. Supplied already assembled, in bars of 3 meters length.
BOX QUANTITY: 2 bars of 3 meters (total 6 meters).

Example of application

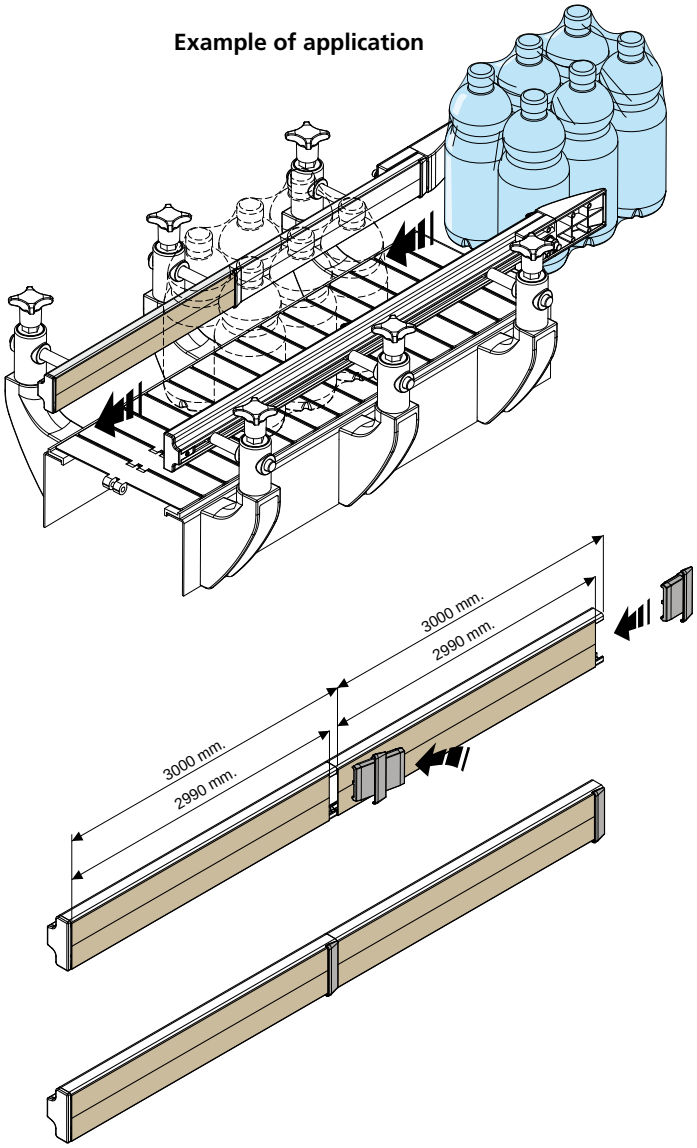

Example of application

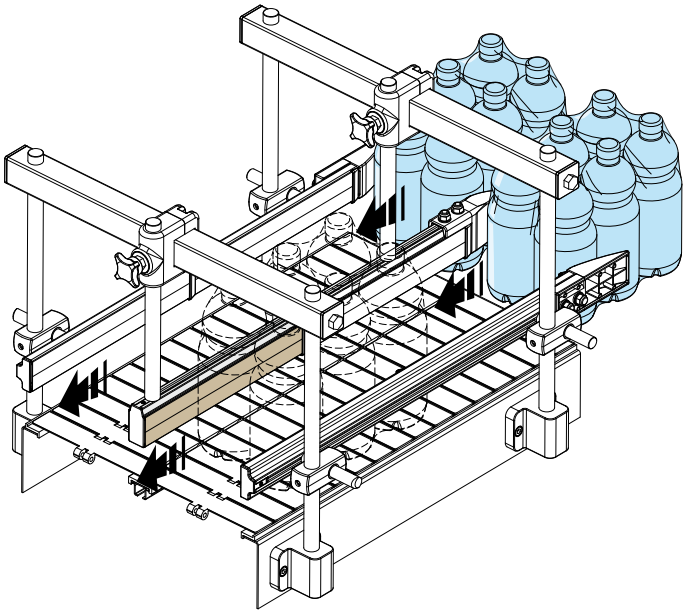

Suitable for applications which require maximum smoothness.

Suitable for use with bundles covered with shrink-wrapped polyethylene film.

Suitable for high temperatures applications.

Product guides and accessories

Example of application

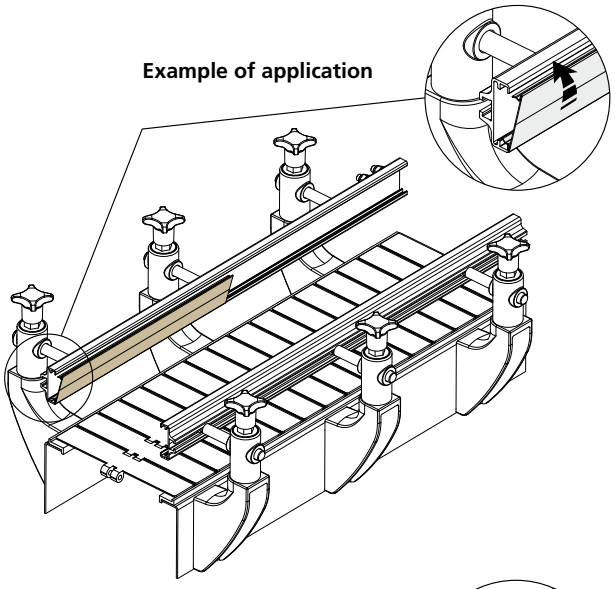

Example of application

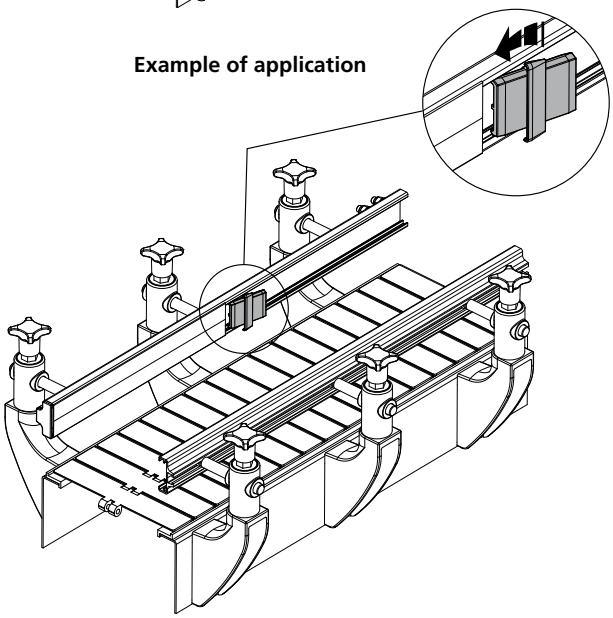

Example of application

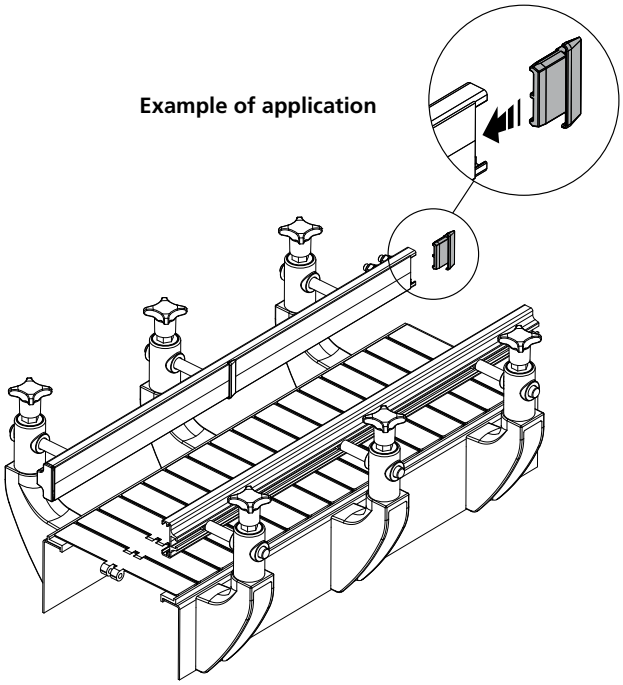

Guide profile
(metallic profile) Part. **482**

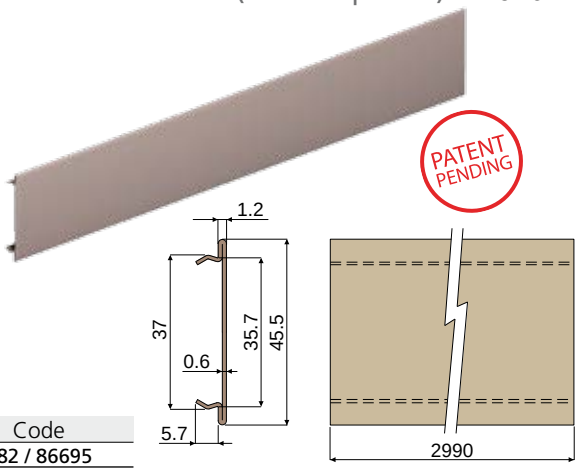

Code
482 / 86695

MATERIALS: Guide profile in stainless steel AISI 304 covered with peek.
FEATURES: Suitable for use with bundles covered with shrink-wrapped polyethylene film. The coating with peek guarantees maximum smoothness of the product. Suitable for high temperatures applications. Peek covering thickness: min. 40 µ, max 50 µ. Supplied in bars of 2.99 meters length. Snap-on assembly on profiles: Part.320, 322.
BOX QUANTITY: 2 bars of 2.99 meters (total 5.98 meters).

Connecting element
(for Part.464, 480) Part. **466**

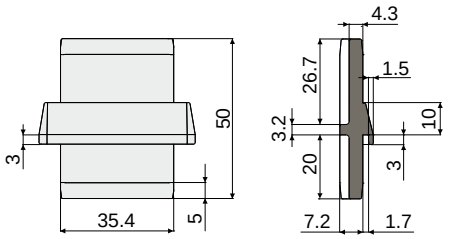

PATENT PENDING

Code
466 / 85563

MATERIALS: Connecting element in grey colour polyamide and auto-lubricating additive.
FEATURES: To be used as a connecting element between the guides: Part.464, 480. The self-lubricating additive guarantees maximum smoothness of the product.
BOX QUANTITY: 8 pieces.
ON REQUEST:
- Box quantity: According to your request.

Closing cap
(for Part.464, 480) Part. **465**

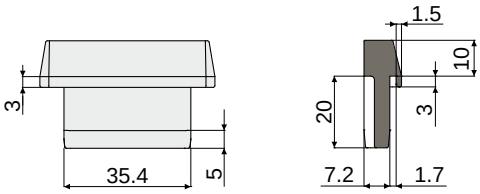

PATENT PENDING

Code
465 / 85562

MATERIALS: Cap in grey colour polyamide and auto-lubricating additive.
FEATURES: To be used as a closure cap at the extremities of the guides: Part.464, 480. The self-lubricating additive guarantees maximum smoothness of the product.
BOX QUANTITY: 8 pieces.
ON REQUEST:
- Box quantity: According to your request.

Suitable for applications which require maximum smoothness.

Suitable for use with bundles covered with shrink-wrapped polyethylene film.

Suitable for high temperatures applications.

Product guides and accessories

Part. 320 Profile for side guides

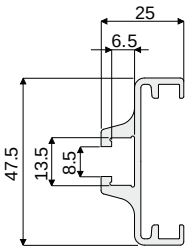

Type	Version	Code	Length
Side	Single	**320 / 82917**	3000

MATERIALS: Metal profile in anodized aluminium.
FEATURES: Supplied in bars of 3 meters length. To be used with guides Part.306, 325, 355, 467, 468, 464.
BOX QUANTITY: 2 bars of 3 meters (total 6 meters).

Part. 321 Profile for side guides

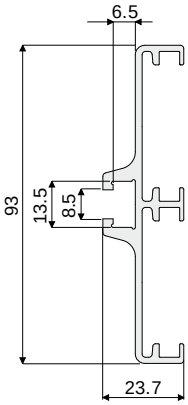

Type	Version	Code	Length
Side	Double	**321 / 82918**	3000

MATERIALS: Metal profile in anodized aluminium.
FEATURES: Supplied in bars of 3 meters length. To be used with guides Part.307, 326, 356, 474, 477.
BOX QUANTITY: 2 bars of 3 meters (total 6 meters).

Part. 322 Profile for central guides

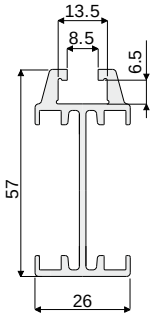

Type	Version	Code	Length
Central	Single	**322 / 82919**	3000

MATERIALS: Metal profile in anodized aluminium.
FEATURES: Supplied in bars of 3 meters length. To be used with guides Part.308, 327, 357, 475, 478, 480.
BOX QUANTITY: 2 bars of 3 meters (total 6 meters).

Part. 323 Profile for central guides

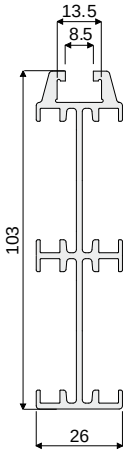

Type	Version	Code	Length
Central	Double	**323 / 82920**	3000

MATERIALS: Metal profile in anodized aluminium.
FEATURES: Supplied in bars of 3 meters length. To be used with guides Part.319, 328, 358, 476, 479.
BOX QUANTITY: 2 bars of 3 meters (total 6 meters).

Product guides and accessories

Example of application

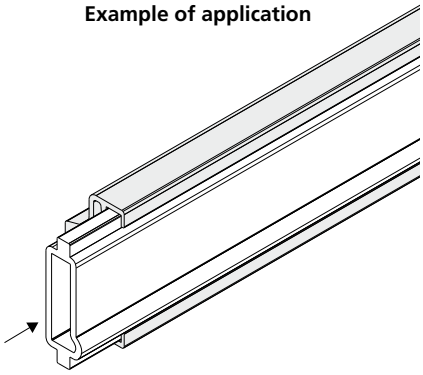

Guide profile for products Part. 329

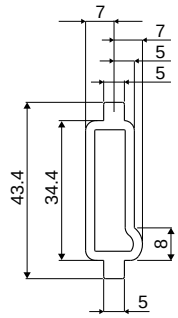

Code
329 / 83007

MATERIALS: Profile made of natural polyethylene white colour.
FEATURES: Supplied in bars of 3 meters length. To be used with guides Part.320, 321, 322, 323.
BOX QUANTITY: 6 bars of 3 meters (total 18 meters).
ON REQUEST:

- Box quantity: According to your request.

Example of application

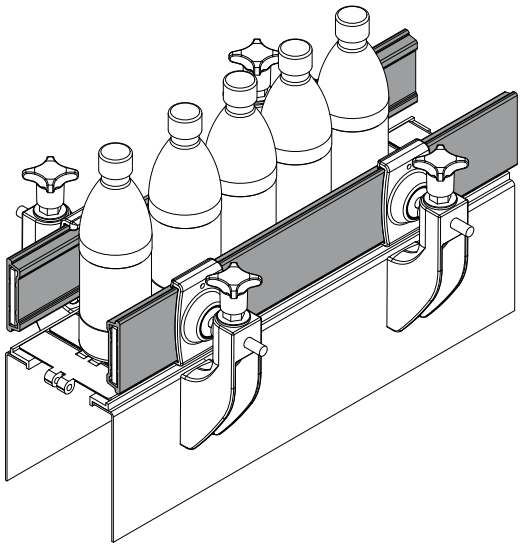

Guide profile Part. 463

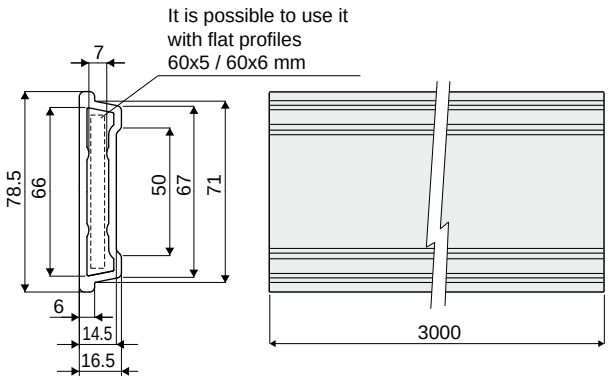

Code
463 / 85552

MATERIALS: Profile made of HD polyethylene black colour.
FEATURES: Supplied in bars of 3 meters length. To be mounted with rail clamps: Part.427, 434 and with the connecting joint Part.511.
BOX QUANTITY: 2 bars of 3 meters (total 6 meters).
ON REQUEST:

- Box quantity: According to your request.

Product guides and accessories

Part. 511 Connecting joint
(for Part.463)

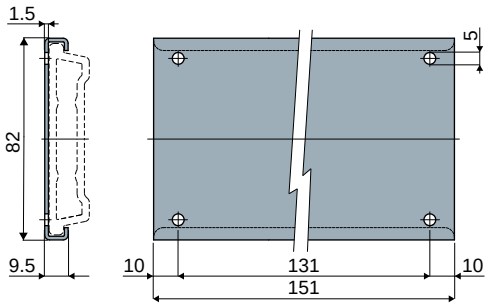

Code
511 / 87044

MATERIALS: Joint and screws made of stainless steel AISI 304.
FEATURES: To be used for connecting the profiles Part.463.
BOX QUANTITY: 8 pieces.
ON REQUEST:
- Box quantity: According to your request.

Example of application

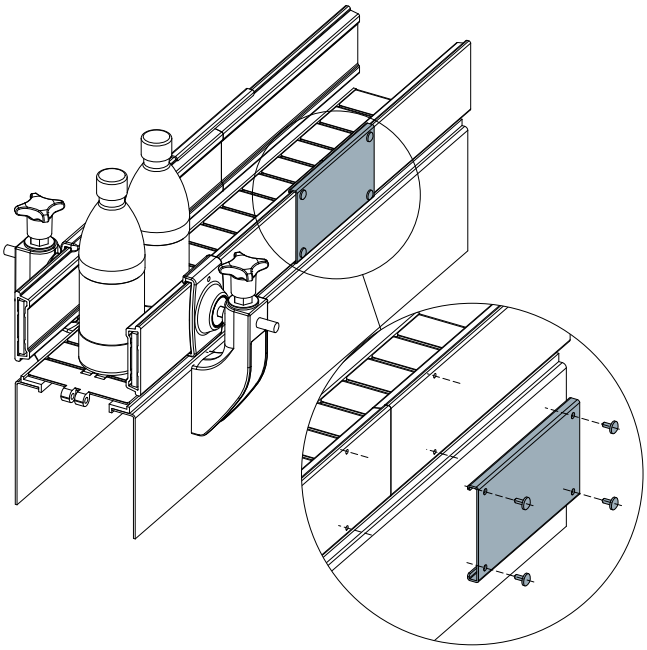

Part. 318 Connecting bar for guides

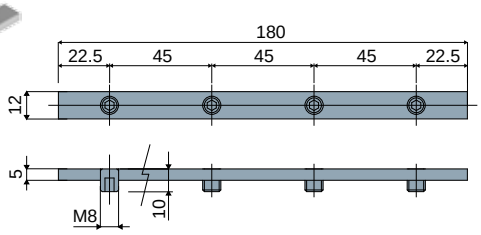

Code
318 / 82913

MATERIALS: Bar is made of zinc plated steel supplied with 4 screws M8x10.
FEATURES: To be used for connecting the metal profiles of Part. 306, 307, 308, 319, 468, 474, 475, 476, 325, 326, 327, 328, 467, 477, 478, 479, 355, 356, 357, 358, 464, 480, 320, 321, 322, 323.
BOX QUANTITY: 8 pieces.
ON REQUEST:
- Box quantity: According to your request.

Example of application

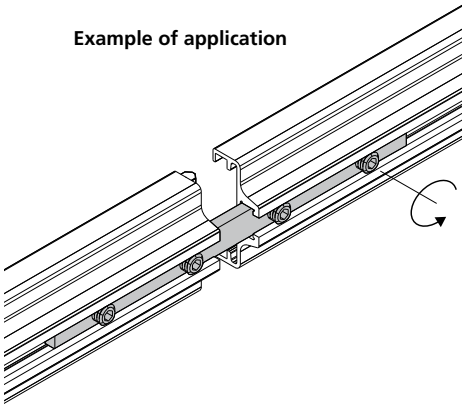

Part. 437 Screw with shaped head
(hammer head)

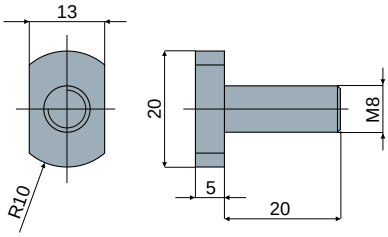

Code
437 / 85235

MATERIALS: Screw in zinc-plated steel.
FEATURES: To be used with guides Part.306, 307, 308, 319, 468, 474, 475, 476, 325, 326, 327, 328, 467, 477, 478, 479, 355, 356, 357, 358, 464, 480, 320, 321, 322, 323.
BOX QUANTITY: 24 pieces.
ON REQUEST:
- Box quantity: According to your request.

Example of application

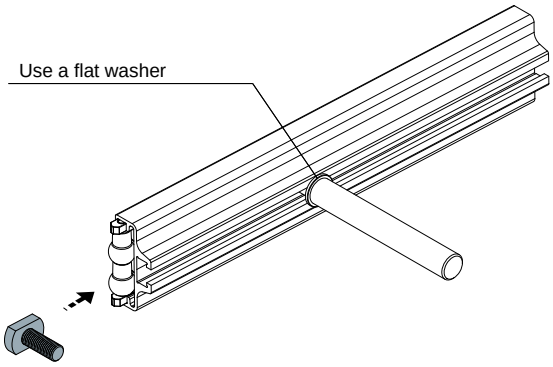

Product guides and accessories

Example of application

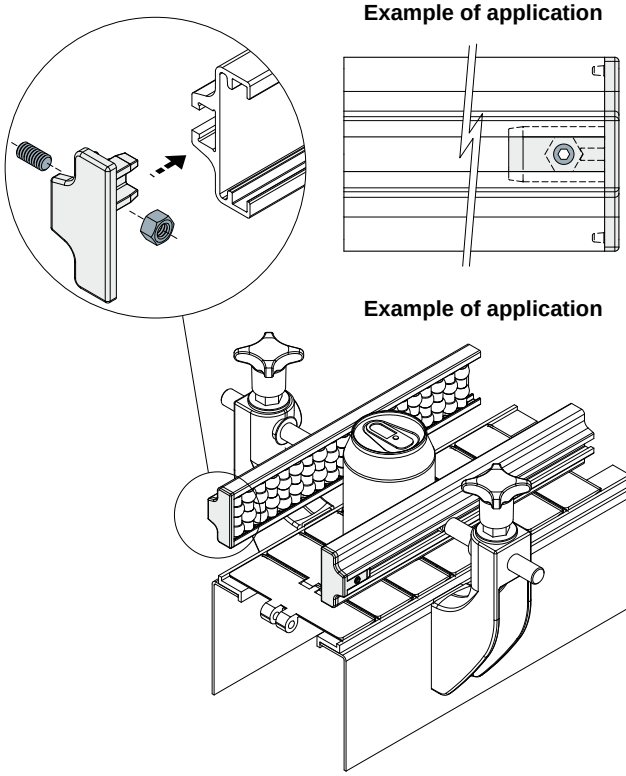

Example of application

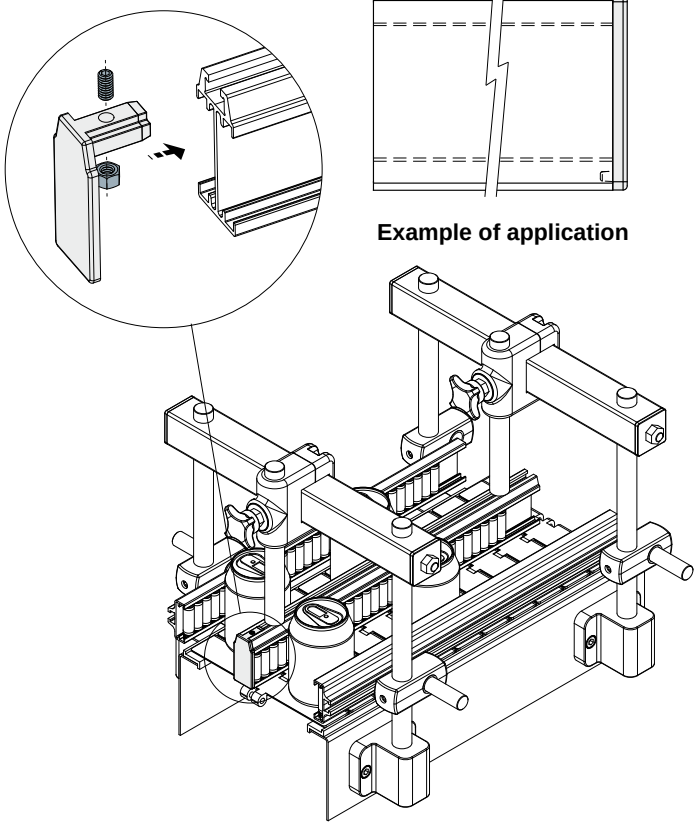

Closing cap
(for side guides, single type)

Part. **415**

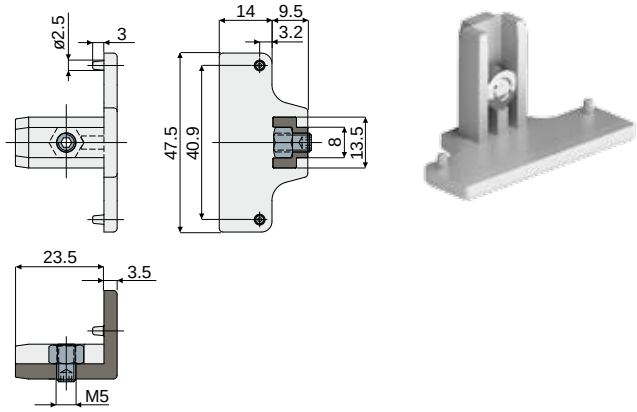

Code
415 / 84547

MATERIALS: Cap in reinforced polyamide grey colour; nut and grub screw in stainless steel AISI 304.

FEATURES: To be used as a closure cap at the extremities of the side guides: Part.306, 468, 325, 467, 355, 464.

BOX QUANTITY: 24 pieces.

ON REQUEST:

- Assembling of: Nuts and grab screws.
- Box quantity: According to your request.

Example of application

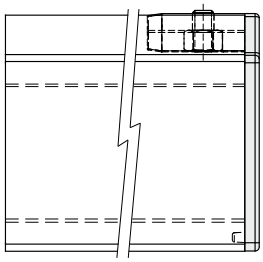

Example of application

Closing cap
(for central guides, single type)

Part. **481**

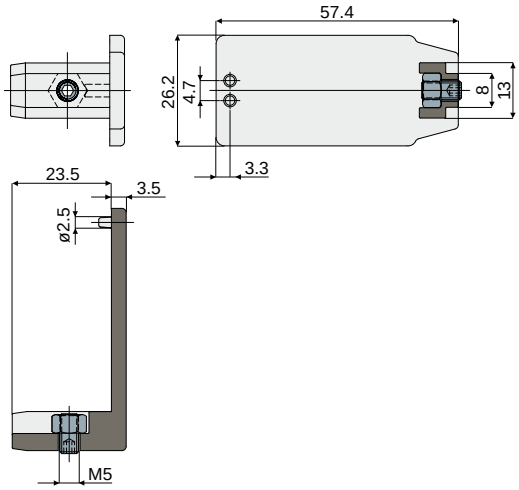

Code
481 / 86002

MATERIALS: Cap in reinforced polyamide grey colour; nut and grub screw in stainless steel AISI 304.

FEATURES: To be used as a closure cap at the extremities of the central guides: Part.308, 475, 327, 478, 357, 480.

BOX QUANTITY: 24 pieces.

ON REQUEST:

- Assembling of: Nuts and grab screws.
- Box quantity: According to your request.

Product guides and accessories

Part. 493 Closing cap
(for side guides, double type)

NEW

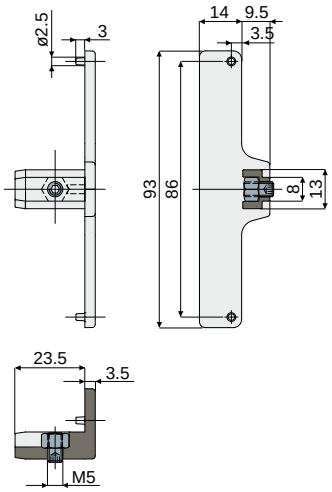

Code
493 / 87014

MATERIALS: Cap in reinforced polyamide grey colour; nut and grub screw in stainless steel AISI 304.

FEATURES: To be used as a closure cap at the extremities of the side guides: Part.307, 474, 326, 477, 356.

BOX QUANTITY: 24 pieces.

ON REQUEST:

- Assembling of: Nuts and grab screws.
- Box quantity: According to your request.

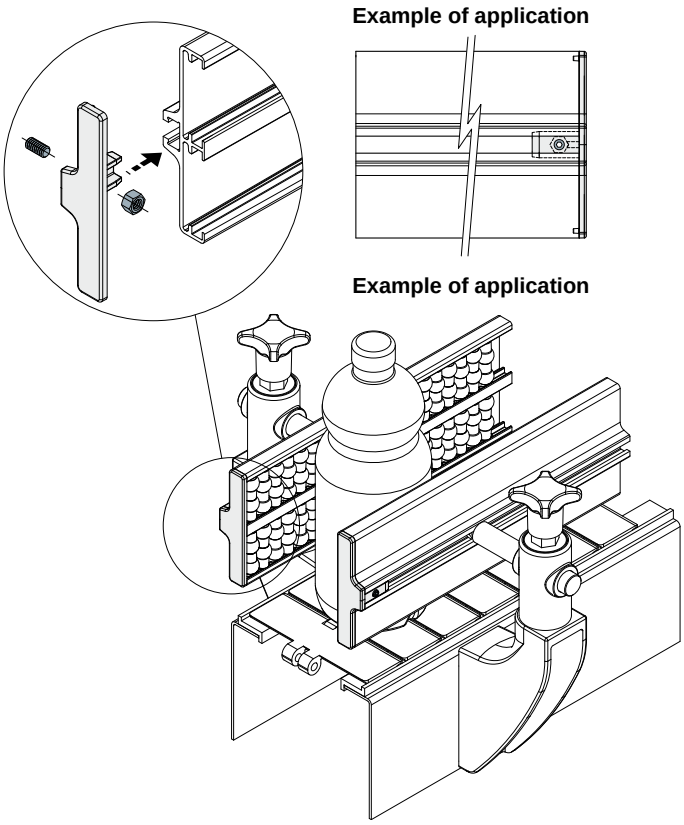

Product guides and accessories

Example of application

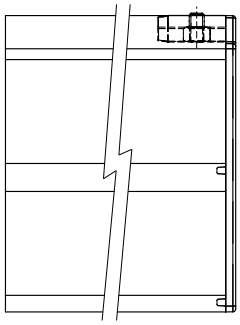

Example of application

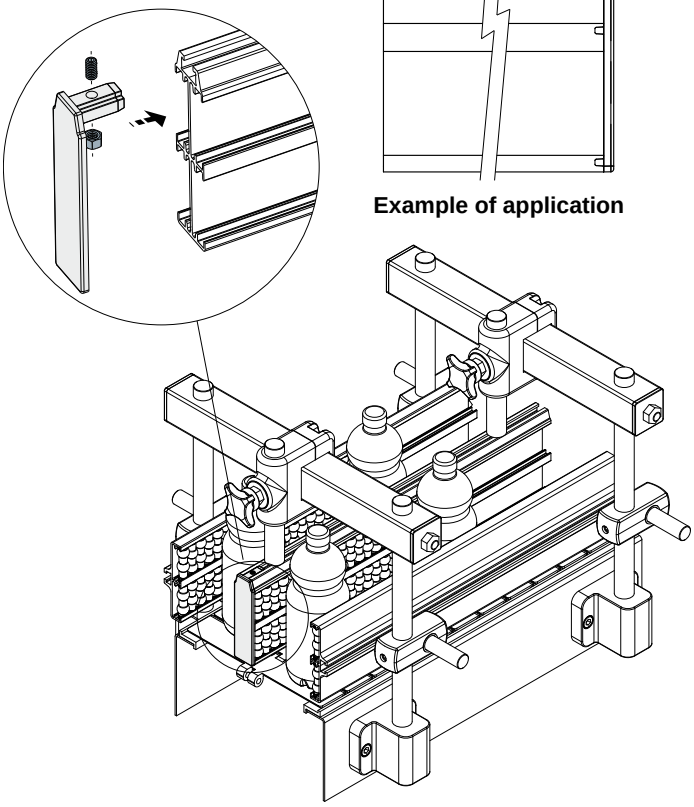

Closing cap
(for central guides, double type)

Part. **494**

NEW

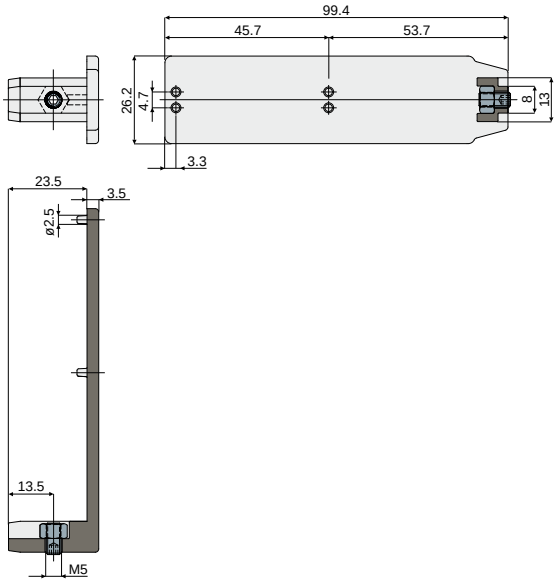

Code
494 / 87015

MATERIALS: Cap in reinforced polyamide grey colour; nut and grub screw in stainless steel AISI 304.

FEATURES: To be used as a closure cap at the extremities of the central guides: Part.319, 476, 328, 479, 358.

BOX QUANTITY: 24 pieces.

ON REQUEST:

- Assembling of: Nuts and grab screws.
- Box quantity: According to your request.

Product guides and accessories

Part. 340 Separation Block for roller side guide (single type)

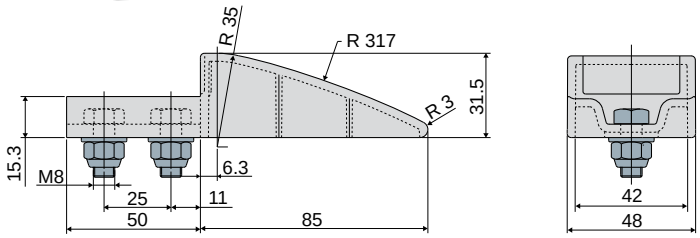

Code	Material
340 / 83357	Polyethylene
340 / 85826	PA + auto-lubricating additive

MATERIALS: Separation block in polyethylene or in polyamide with auto-lubricating additive; bolts and nuts in stainless steel AISI 304.
FEATURES: To be used at the end of the side guides (Part.306, 468, 325, 467, 355, 464), to help the arrival of the products. The version with auto-lubricating additive guarantees maximum smoothness of the product. Supplied complete with bolts and nuts.
BOX QUANTITY: 8 pieces.
ON REQUEST:
- **Separation blocks:** Other colours.
- **Box quantity:** According to your request.

Example of application

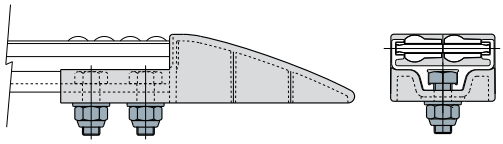

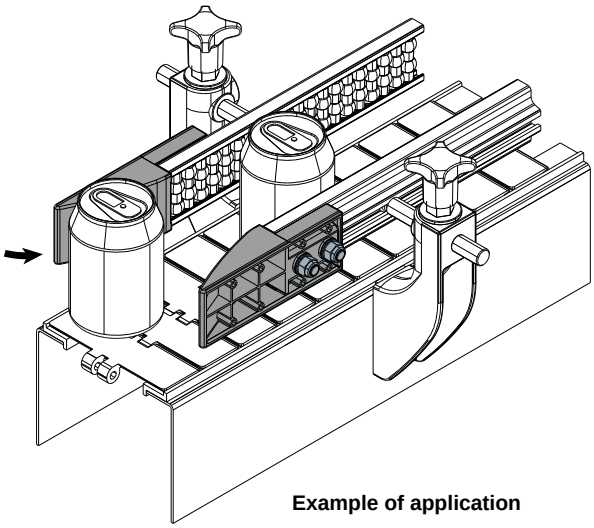

Example of application

Part. 341 Separation Block for roller central guide (single type)

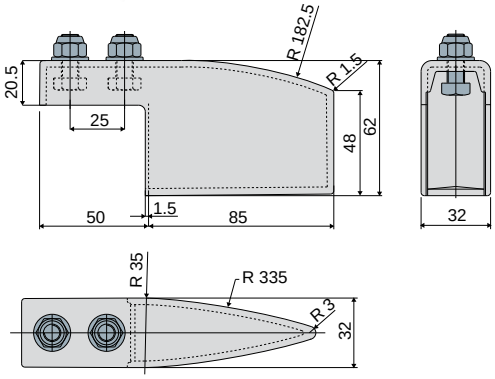

Code	Material
341 / 83359	Polyethylene
341 / 85828	PA + auto-lubricating additive

MATERIALS: Separation block in polyethylene or in polyamide with auto-lubricating additive; bolts and nuts in stainless steel AISI 304.
FEATURES: To be used at the end of the central guides (Part.308, 475, 327, 478, 357, 480), to help the arrival of the products. The version with auto-lubricating additive guarantees maximum smoothness of the product. Supplied complete with bolts and nuts.
BOX QUANTITY: 8 pieces.
ON REQUEST:
- **Separation blocks:** Other colours.
- **Box quantity:** According to your request.

Example of application

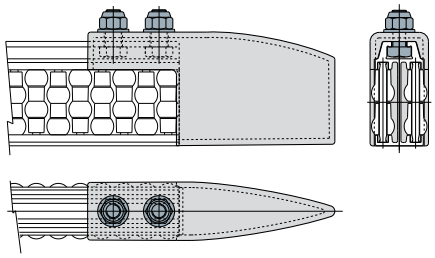

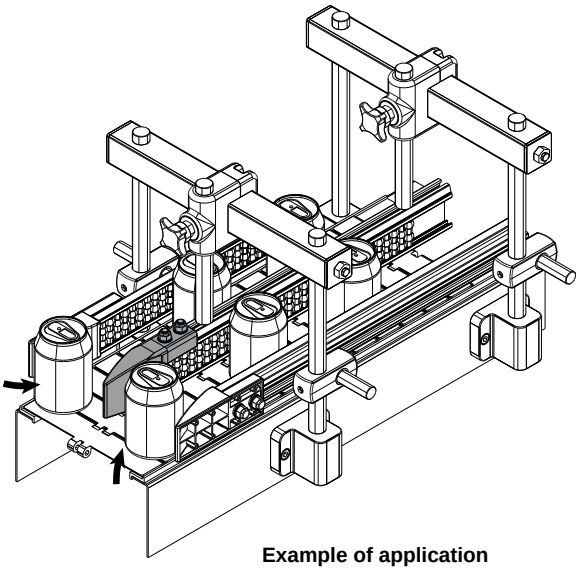

Example of application

Suitable for applications which require maximum smoothness.

Product guides and accessories

Example of application

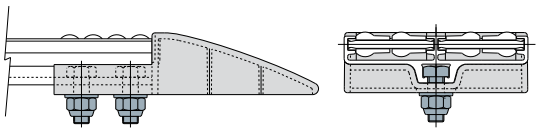

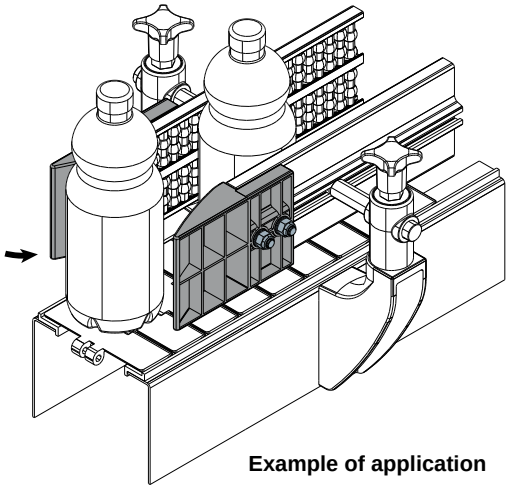

Example of application

Separation Block for roller side guide (double type) Part. 342

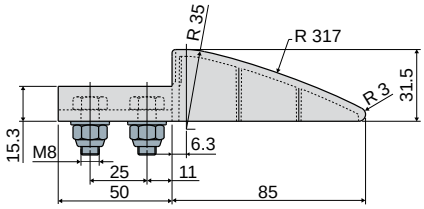

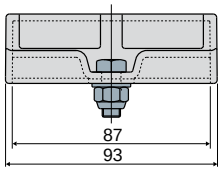

Code	Material
342 / 83361	Polyethylene
342 / 85984	PA + auto-lubricating additive

MATERIALS: Separation block in polyethylene or in polyamide with auto-lubricating additive; bolts and nuts in stainless steel AISI 304.

FEATURES: To be used at the end of the side guides (Part.307, 474, 326, 477, 356), to help the arrival of the products. The version with auto-lubricating additive guarantees maximum smoothness of the product. Supplied complete with bolts and nuts.

BOX QUANTITY: 8 pieces.

ON REQUEST:

- **Separation blocks:** Other colours.
- **Box quantity:** According to your request.

Example of application

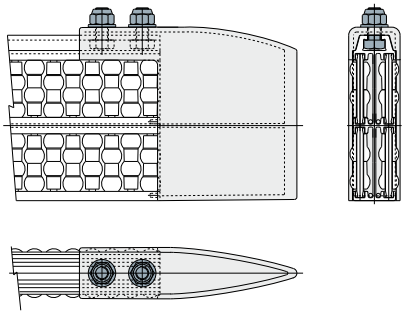

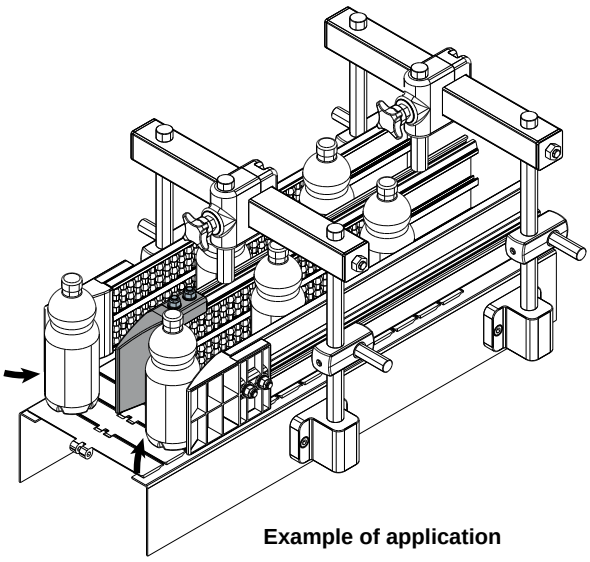

Example of application

Separation Block for roller central guide (double type) Part. 343

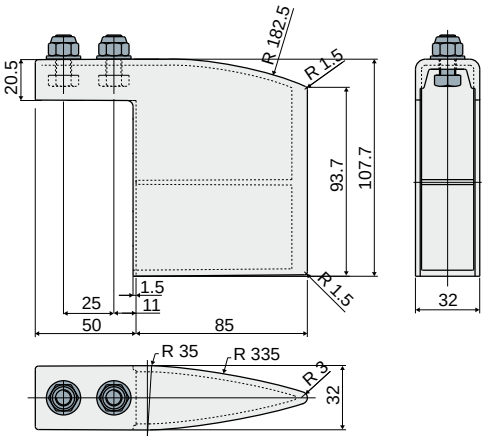

Code	Material
343 / 83363	Polyethylene
343 / 85985	PA + auto-lubricating additive

MATERIALS: Separation block in polyethylene or in polyamide with auto-lubricating additive; bolts and nuts in stainless steel AISI 304.

FEATURES: To be used at the end of the central guides (Part.319, 476, 328, 479, 358), to help the arrival of the products. The version with auto-lubricating additive guarantees maximum smoothness of the product. Supplied complete with bolts and nuts.

BOX QUANTITY: 8 pieces.

ON REQUEST:

- **Separation blocks:** Other colours.
- **Box quantity:** According to your request.

Suitable for applications which require maximum smoothness.

Product guides and accessories

Part. 345 Roller side guide with pearls
(single type, 375 mm modules)

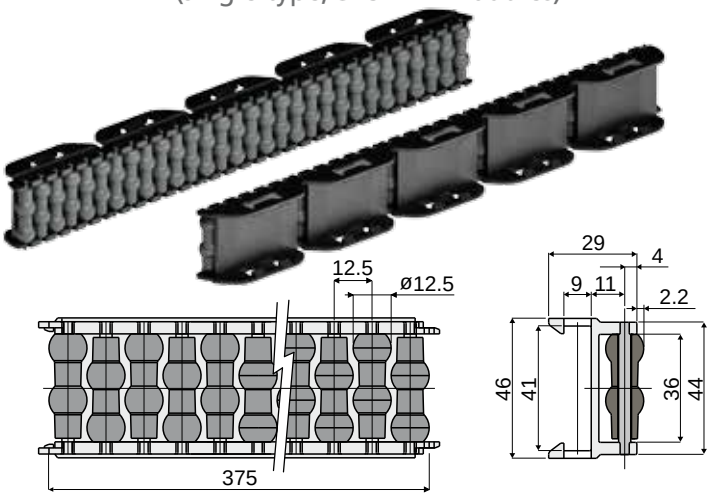

Pins made of acetal	Pins made of stainless steel AISI 304
Code	Code
345 / 83380	345 / 86717

MATERIALS: Rollers in polyethylene grey colour; modules in acetal resin black colour; support pins in black acetal or in stainless steel AISI 304.
FEATURES: Supplied already assembled, in modules of 375 mm length, for 40x8 mm plate. Min. curvature radius: ext = 500 mm; int. = 350 mm.
BOX QUANTITY: 12 pieces.
ON REQUEST:
- **Module and rollers:** Can be produced in other colours.
- **Box quantity:** According to your request.

Example of application

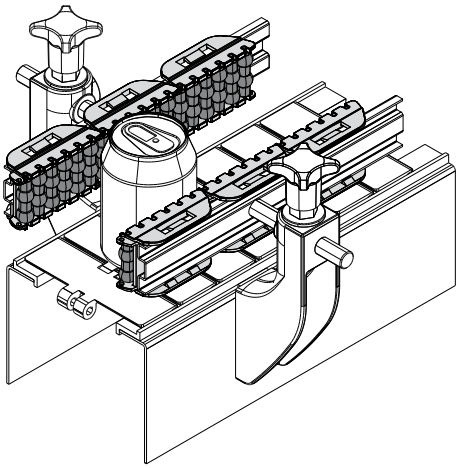

Part. 423 Roller side guide with pearls
(double type, 375 mm modules)

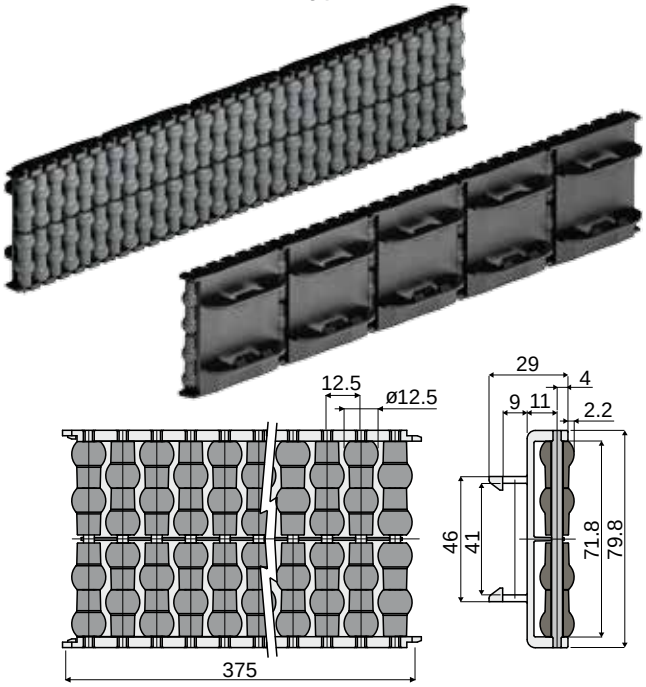

Pins made of acetal	Pins made of stainless steel AISI 304
Code	Code
423 / 84818	423 / 85272

MATERIALS: Rollers in polyethylene grey colour; modules in acetal resin black colour; support pins in black acetal or in stainless steel AISI 304.
FEATURES: Supplied already assembled, in modules of 375 mm length, for 40x8 mm plate. Min. curvature radius: ext = 500 mm; int. = 350 mm.
BOX QUANTITY: 12 pieces.
ON REQUEST:
- **Module and rollers:** Can be produced in other colours.
- **Box quantity:** According to your request.

Example of application

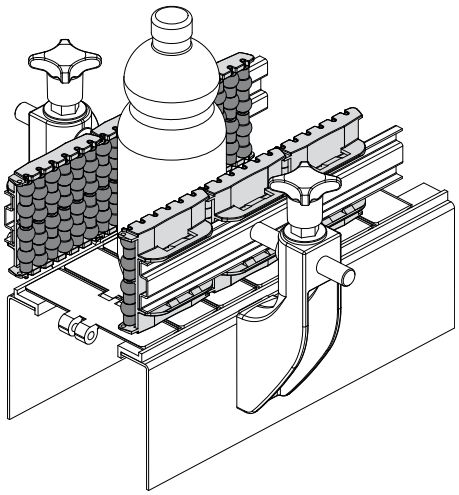

Product guides and accessories

Example of application

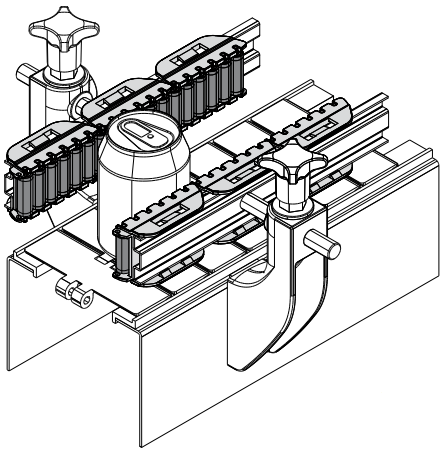

Roller side guide with cylinders
(single type, 375 mm modules)

Part. **339**

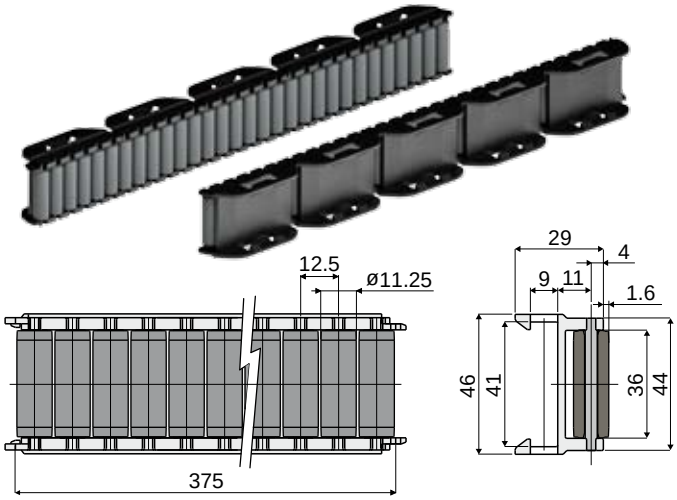

Pins made of acetal	Pins made of stainless steel AISI 304
Code	Code
339 / 83319	339 / 86718

MATERIALS: Rollers in polyethylene grey colour; modules in acetal resin black colour; support pins in black acetal or in stainless steel AISI 304.
FEATURES: Supplied already assembled, in modules of 375 mm length, for 40x8 mm plate. Min. curvature radius: ext = 500 mm; int. = 350 mm.
BOX QUANTITY: 12 pieces.
ON REQUEST:
- **Module and rollers:** can be produced in other colours.
- **Box quantity:** According to your request.

Example of application

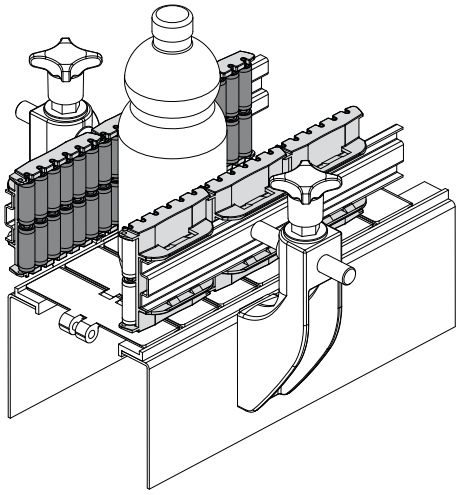

Roller side guide with cylinders
(double type, 375 mm modules)

Part. **422**

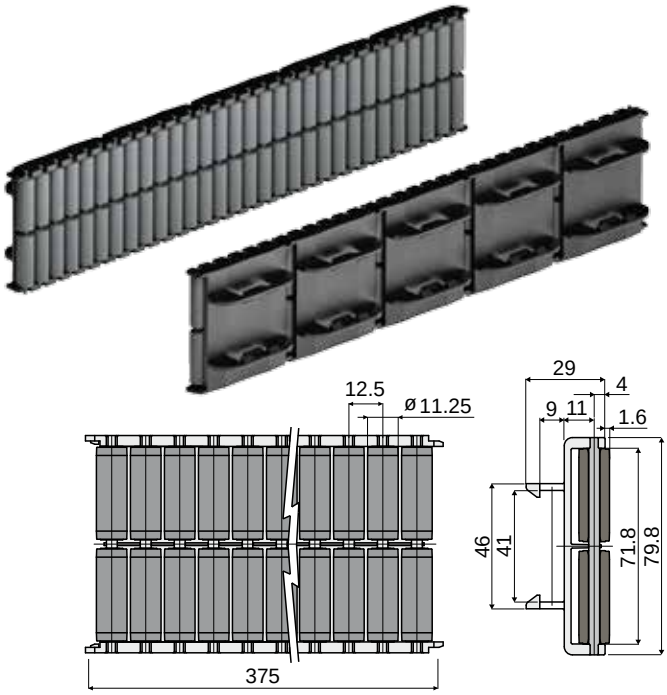

Pins made of acetal	Pins made of stainless steel AISI 304
Code	Code
422 / 84817	422 / 85273

MATERIALS: Rollers in polyethylene grey colour; modules in acetal resin black colour; support pins in black acetal or in stainless steel AISI 304.
FEATURES: Supplied already assembled, in modules of 375 mm length, for 40x8 mm plate. Min. curvature radius: ext = 500 mm; int. = 350 mm.
BOX QUANTITY: 12 pieces.
ON REQUEST:
- **Module and rollers:** Can be produced in other colours.
- **Box quantity:** According to your request.

Product guides and accessories

Part. 344 Roller side guide with round rollers
(single type, 375 mm modules)

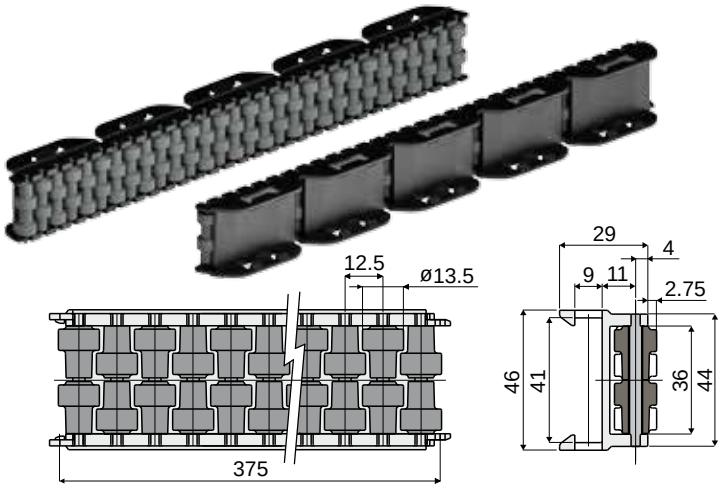

Pins made of acetal	Pins made of stainless steel AISI 304
Code	Code
344 / 83372	344 / 86719

MATERIALS: Rollers in polyethylene grey colour; modules in acetal resin black colour; support pins in black acetal or in stainless steel AISI 304.
FEATURES: Supplied already assembled, in modules of 375 mm length, for 40x8 mm plate.
Min. curvature radius: ext = 500 mm; int. = 350 mm.
BOX QUANTITY: 12 pieces.
ON REQUEST:
- **Module and rollers:** can be produced in other colours.
- **Box quantity:** According to your request.

Example of application

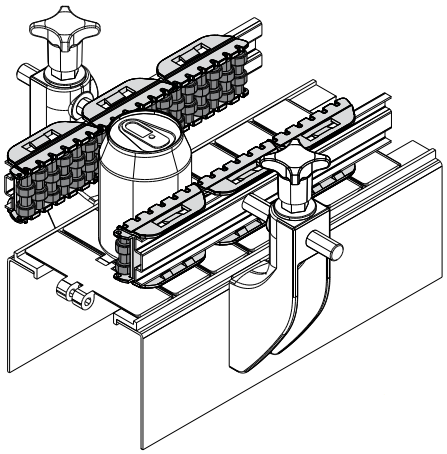

Part. 421 Roller side guide with round rollers
(double type, 375 mm modules)

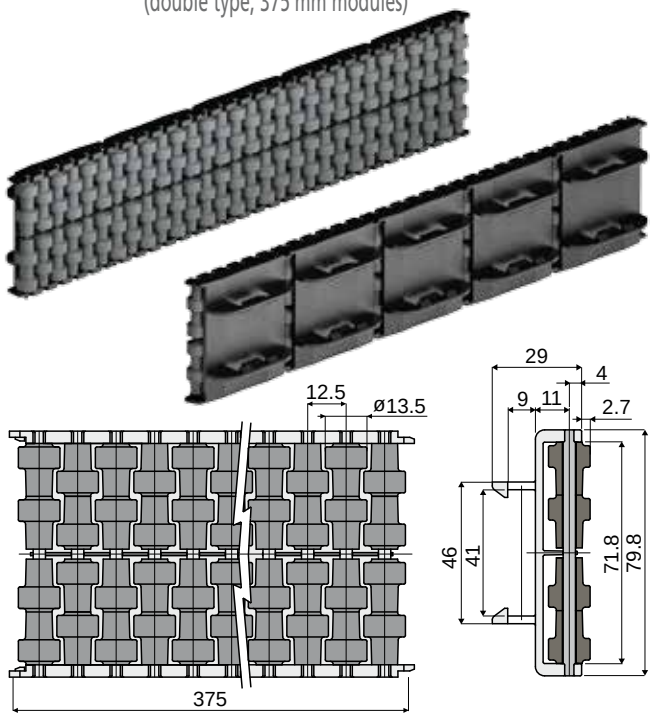

Pins made of acetal	Pins made of stainless steel AISI 304
Code	Code
421 / 84816	421 / 85274

MATERIALS: Rollers in polyethylene grey colour; modules in acetal resin black colour; support pins in black acetal or in stainless steel AISI 304.
FEATURES: Supplied already assembled, in modules of 375 mm length, for 40x8 mm plate.
Min. curvature radius: ext = 500 mm; int. = 350 mm.
BOX QUANTITY: 12 pieces.
ON REQUEST:
- **Module and rollers:** Can be produced in other colours.
- **Box quantity:** According to your request.

Example of application

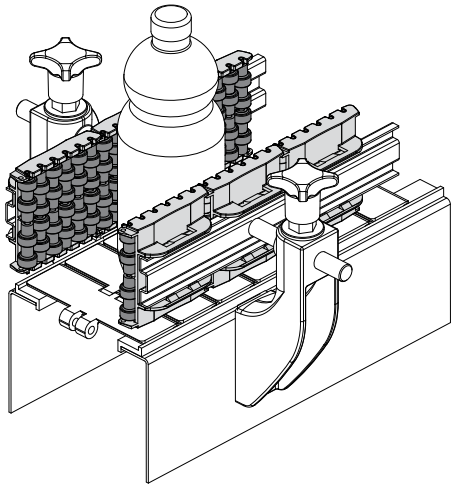

Product guides and accessories

Example of application

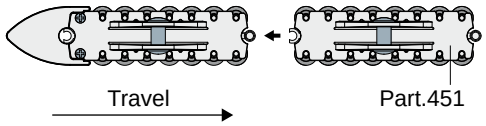

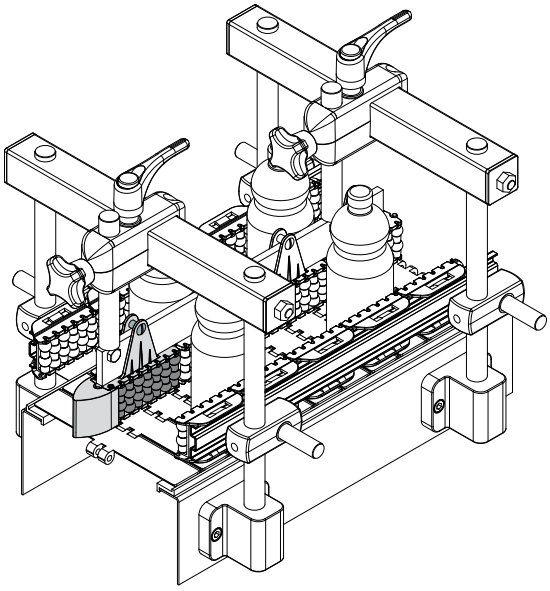

Example of application

Fixing with plate

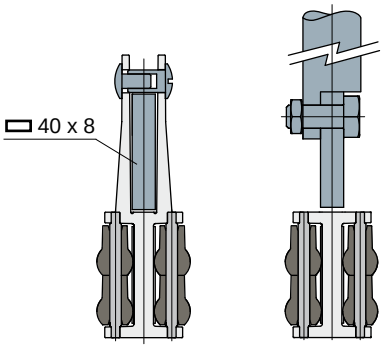

Fixing with metal profile

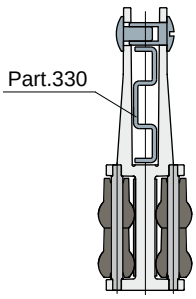

Separation Block with pearls
(for Part.451)

Part. **448**

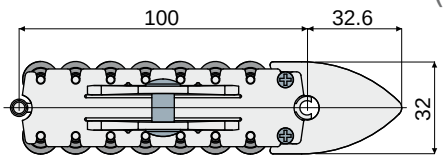

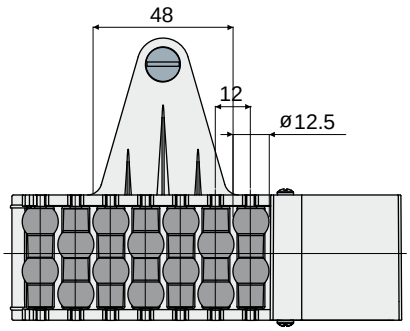

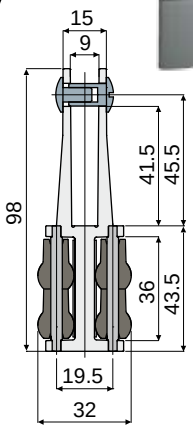

Pins made of acetal	Pins made of stainless steel AISI 304
Code	Code
448 / 85374	448 / 85459

MATERIALS: Rollers in polyethylene grey colour; module in acetal resin black colour; shoe in acetal resin grey colour; support pins in black acetal or in stainless steel AISI 304.
FEATURES: Supplied already assembled (1 module + 1 shoe); for 40x8 mm plate.
BOX QUANTITY: 2 pieces.
ON REQUEST:
- **Module and rollers:** Can be produced in other colours.
- **Box quantity:** According to your request.

Roller central guide with pearls
(500 mm modules)

Part. **451**

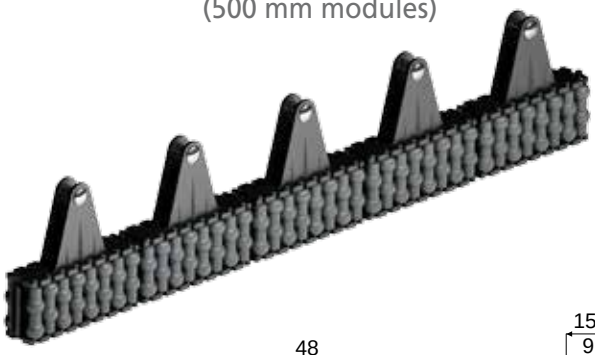

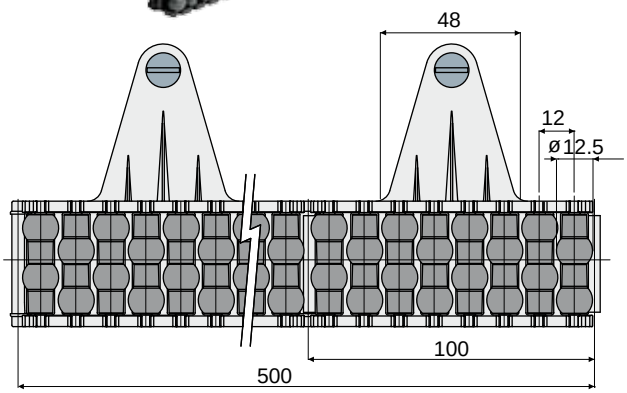

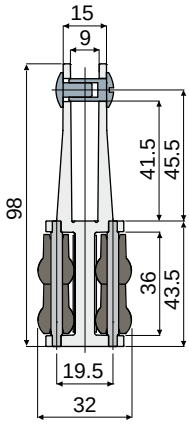

Pins made of acetal	Pins made of stainless steel AISI 304
Code	Code
451 / 85377	451 / 85467

MATERIALS: Rollers in polyethylene grey colour; modules in acetal resin black colour; support pins in black acetal or in stainless steel AISI 304.
FEATURES: Supplied already assembled, in modules of 500 mm length, for 40x8 mm plate.
Min. curvature radius: 335 mm.
BOX QUANTITY: 12 pieces.
ON REQUEST:
- **Module and rollers:** Can be produced in other colours.
- **Box quantity:** According to your request.

Product guides and accessories

Part. 449 Separation Block with cylinders
(for Part.452)

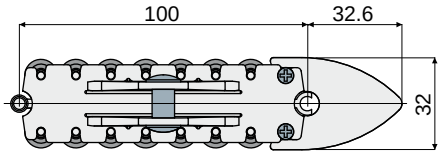

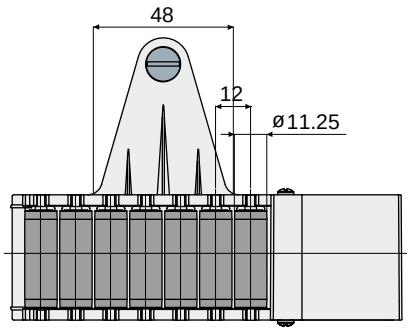

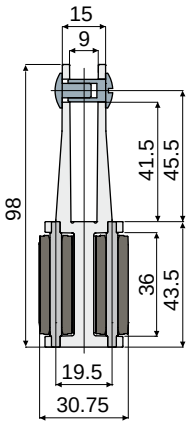

Pins made of acetal	Pins made of stainless steel AISI 304
Code	Code
449 / 85375	449 / 85460

MATERIALS: Rollers in polyethylene grey colour; module in acetal resin black colour; shoe in acetal resin grey colour; support pins in black acetal or in stainless steel AISI 304.
FEATURES: Supplied already assembled (1 module + 1 shoe); for 40x8 mm plate.
BOX QUANTITY: 2 pieces.
ON REQUEST:
- Module and rollers: Can be produced in other colours.
- Box quantity: According to your request.

Example of application

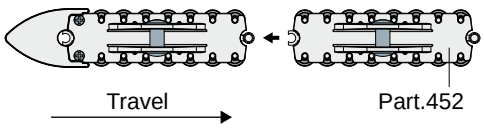

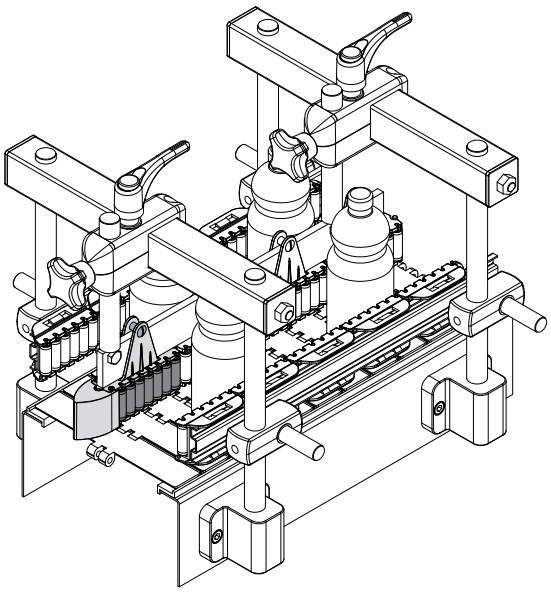

Example of application

Part. 452 Roller central guide with cylinders
(500 mm modules)

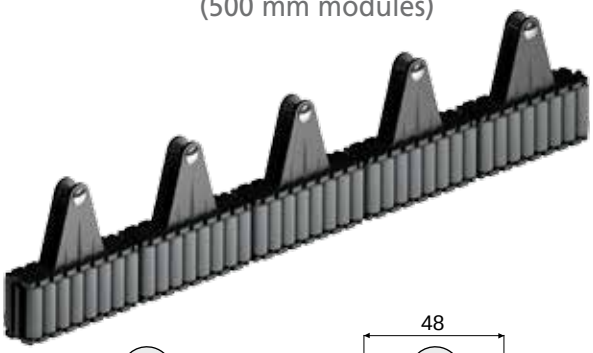

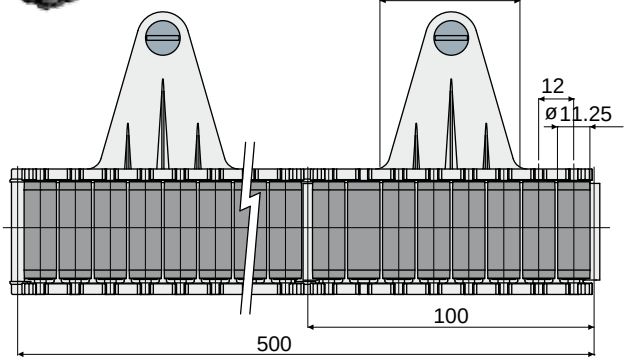

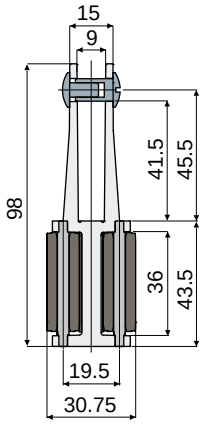

Pins made of acetal	Pins made of stainless steel AISI 304
Code	Code
452 / 85378	452 / 85468

MATERIALS: Rollers in polyethylene grey colour; modules in acetal resin black colour; support pins in black acetal or in stainless steel AISI 304.
FEATURES: Supplied already assembled, in modules of 500 mm length, for 40x8 mm plate.
Min. curvature radius: 335 mm.
BOX QUANTITY: 12 pieces.
ON REQUEST:
- Module and rollers: Can be produced in other colours.
- Box quantity: According to your request.

Fixing with plate

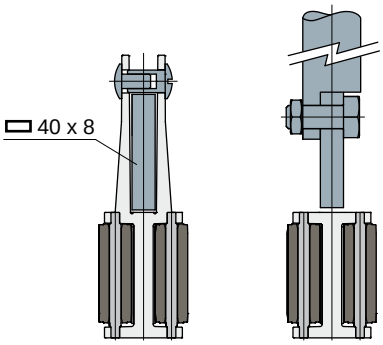

Fixing with metal profile

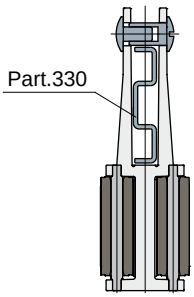

Product guides and accessories

Example of application

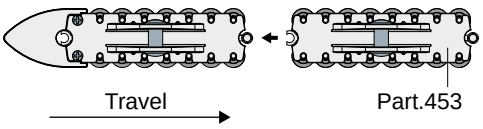

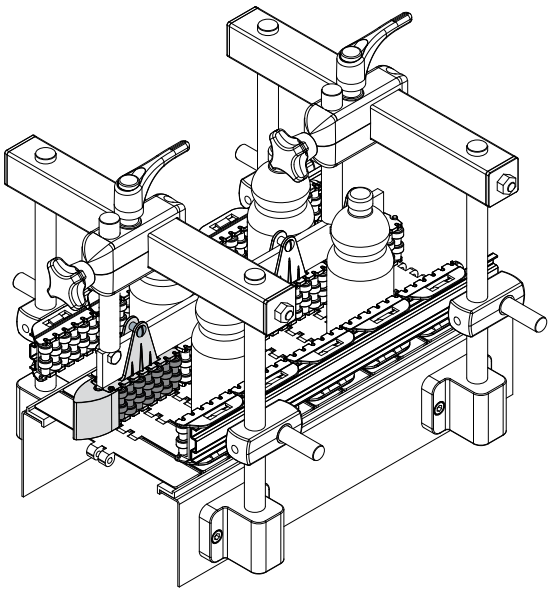

Example of application

Fixing with plate

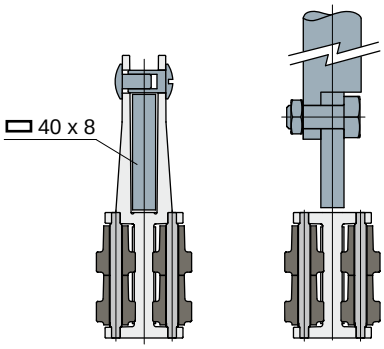

Fixing with metal profile

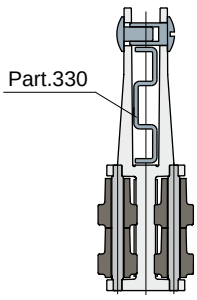

Separation Block with round rollers

(for Part.453)

Part. **450**

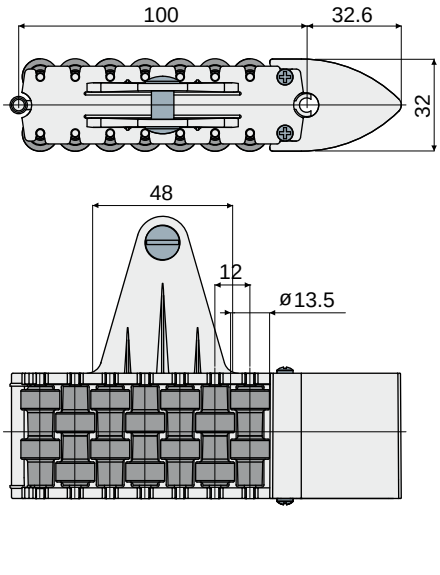

Pins made of acetal	Pins made of stainless steel AISI 304
Code	Code
450 / 85376	**450 / 85461**

MATERIALS: Rollers in polyethylene grey colour; module in acetal resin black colour; shoe in acetal resin grey colour; support pins in black acetal or in stainless steel AISI 304.
FEATURES: Supplied already assembled (1 module + 1 shoe); for 40x8 mm plate.
BOX QUANTITY: 2 pieces.
ON REQUEST:
- **Module and rollers:** Can be produced in other colours.
- **Box quantity:** According to your request.

Roller central guide with round rollers

(500 mm modules)

Part. **453**

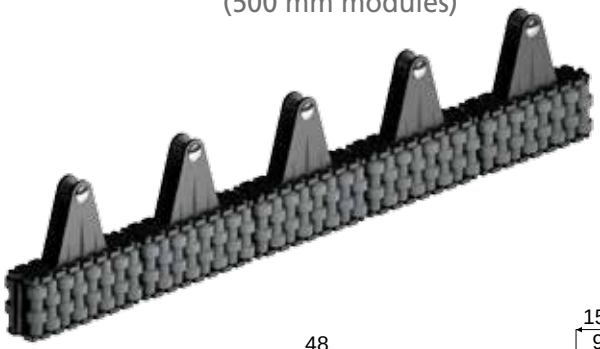

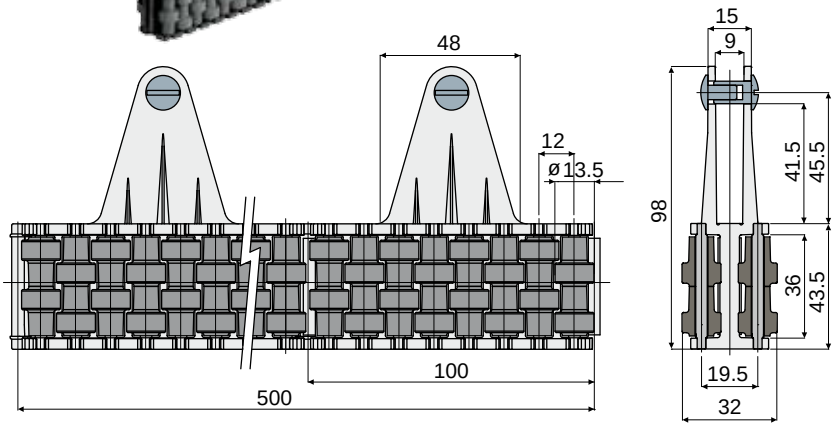

Pins made of acetal	Pins made of stainless steel AISI 304
Code	Code
453 / 85379	**453 / 85469**

MATERIALS: Rollers in polyethylene grey colour; modules in acetal resin black colour; support pins in black acetal or in stainless steel AISI 304.
FEATURES: Supplied already assembled, in modules of 500 mm length, for 40x8 mm plate.
Min. curvature radius: 335 mm.
BOX QUANTITY: 12 pieces.
ON REQUEST:
- **Module and rollers:** Can be produced in other colours.
- **Box quantity:** According to your request.

Product guides and accessories

Part. 388 Roller for transfer plates

(for Part. 257, 258, 259, 260, 261, 262, 416, 417, 430, 431, 432, 433)

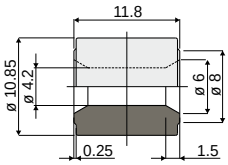

Code
388 / 84131

MATERIALS: Roller made of polyethylene, grey colour.
BOX QUANTITY: 480 pieces.
ON REQUEST:
- Rollers: In different colours.
- Box quantity: According to your request.

Example of application

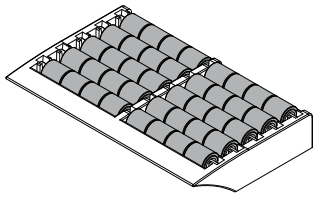

Part. 393 Roller for roller guides

(for Part. 306, 307, 308, 319, 345, 423, 448, 451)

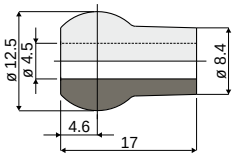

Code
393 / 84182

MATERIALS: Roller made of polyethylene, grey colour.
BOX QUANTITY: 480 pieces.
ON REQUEST:
- Rollers: In different colours.
- Box quantity: According to your request.

Example of application

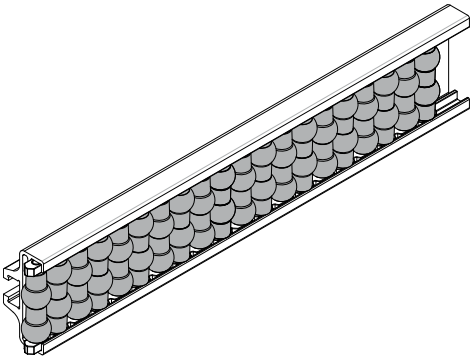

Part. 394 Roller for roller guides

(for Part. 344, 355, 356, 357, 358, 421, 450, 453)

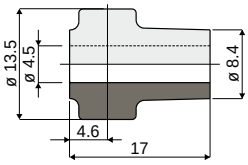

Code
394 / 84183

MATERIALS: Roller made of polyethylene, grey colour.
BOX QUANTITY: 480 pieces.
ON REQUEST:
- Rollers: In different colours.
- Box quantity: According to your request.

Example of application

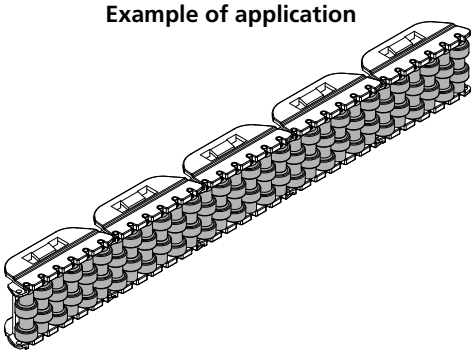

Part. 395 Roller for roller guides

(for Part. 325, 326, 327, 328, 339, 422, 449, 452)

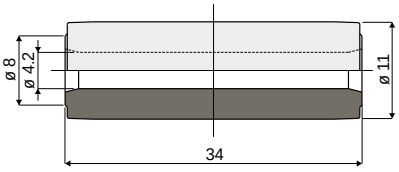

Code
395 / 84185

MATERIALS: Roller made of polyethylene, grey colour.
BOX QUANTITY: 480 pieces.
ON REQUEST:
- Rollers: In different colours.
- Box quantity: According to your request.

Example of application

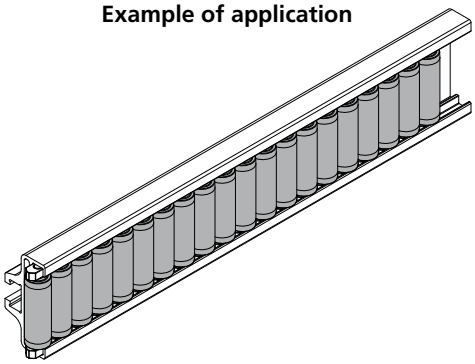

Part. 500 Roller for roller guides

NEW

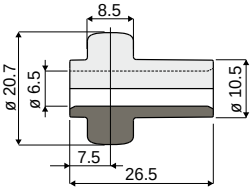

Code
500 / 86215

MATERIALS: Roller made of acetal, white colour.
BOX QUANTITY: 480 pieces.
ON REQUEST:
- Rollers: In different colours.
- Box quantity: According to your request.

Example of application

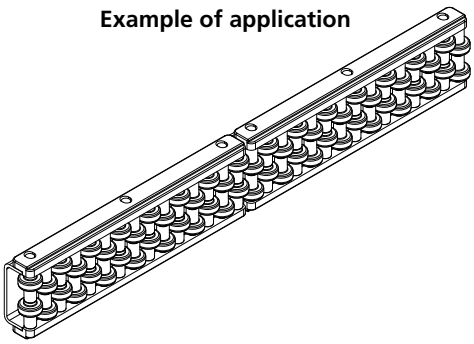

Product guides and accessories

Profiles for side guides Part. 330

Example of application

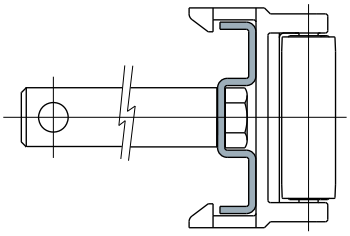

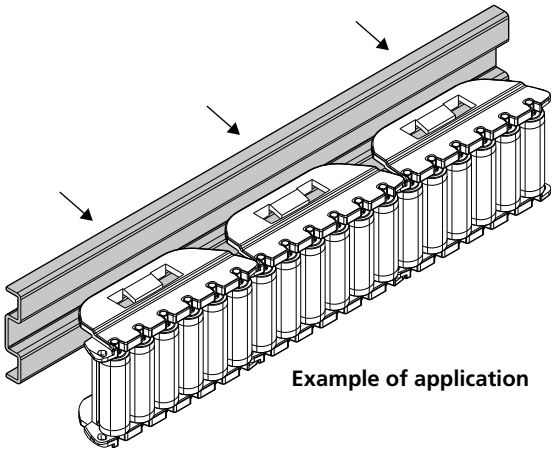

Example of application

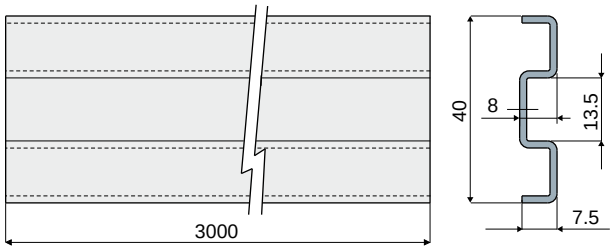

Stainless steel AISI 304	Stainless steel AISI 430
Code	Code
330 / 83089	330 / 83021

MATERIALS: Profiles in stainless steel AISI 430 or AISI 304.
FEATURES: Supplied in bars of 3 meters length. To be used with side guide Part.345, 423, 339, 422, 344, 421.
BOX QUANTITY: 2 bars of 3 meters (total 6 meters).
ON REQUEST:
- Box quantity: According to your request.

Profile for side guides Part. 375

Example of application

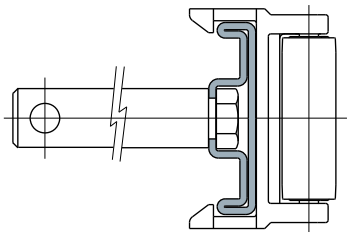

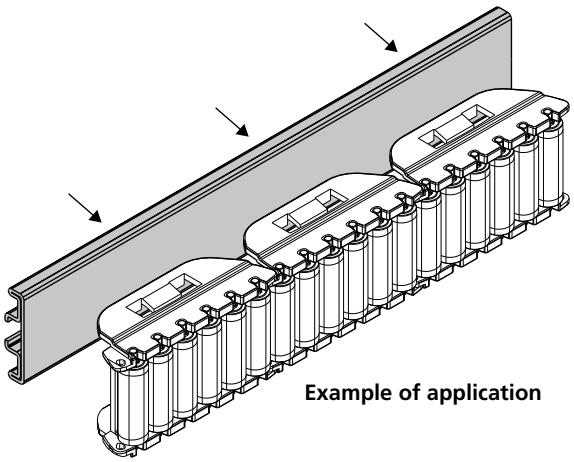

Example of application

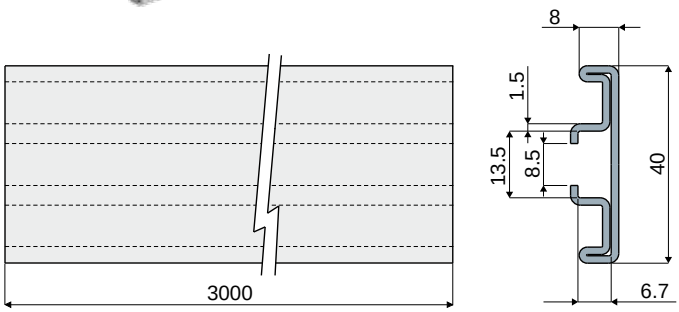

Code
375 / 83890

MATERIALS: Profiles in stainless steel AISI 304.
FEATURES: Supplied in lengths of 3 meters.
To be used with side guide Part.345, 423, 339, 422, 344, 421.
BOX QUANTITY: 2 lengths of 3 meters each (total 6 meters).
ON REQUEST:
- Box quantity: According to your request.

Product guides and accessories

Part. 426 Profile
(for the product side guide)

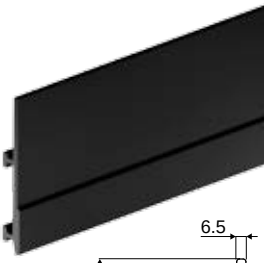

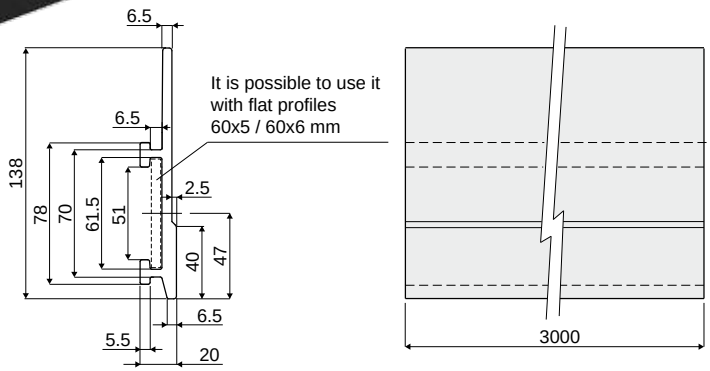

Code	Colour	L
426 / 84994	Black	3 Mt.
426 / 84995	Black	6 Mt.
426 / 84996	Blue (Ral 5005)	3 Mt.
426 / 84997	Blue (Ral 5005)	6 Mt.

MATERIALS: Profile in HMWPE.
FEATURES: Supplied in lengths of 3 or 6 Mt. To be assembled with clamps Part. 427, 434.
BOX QUANTITY: 2 lengths of 6 Mt. (total 12 Mt.), or 2 lengths of 3 Mt. (total 6 Mt.).
ON REQUEST:
- **Profiles:** In different colours and sizes.
- **Box quantity:** According to your request.

Example of application

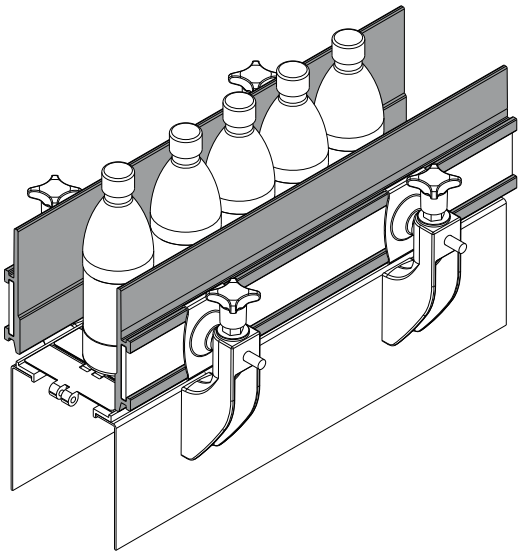

Part. 425 Profile
(for the product side guide)

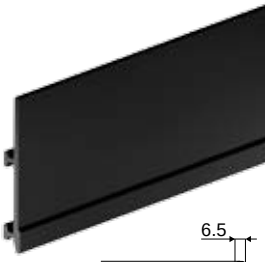

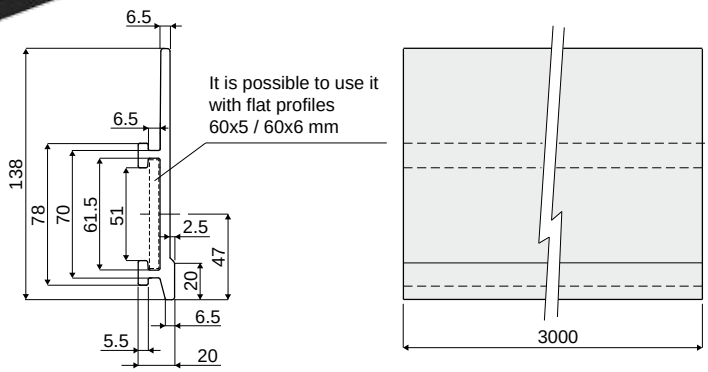

Code	Colour	L
425 / 84998	Black	3 Mt.
425 / 84999	Black	6 Mt.
425 / 85000	Blue RAL 5005	3 Mt.
425 / 85001	Blue RAL 5005	6 Mt.

MATERIALS: Profile in HMWPE.
FEATURES: Supplied in lengths of 3 or 6 Mt. To be assembled with clamps Part. 427, 434.
BOX QUANTITY: 2 lengths of 6 Mt. (total 12 Mt.), or 2 lengths of 3 Mt. (total 6 Mt.).
ON REQUEST:
- **Profiles:** In different colours and sizes.
- **Box quantity:** According to your request.

Example of application

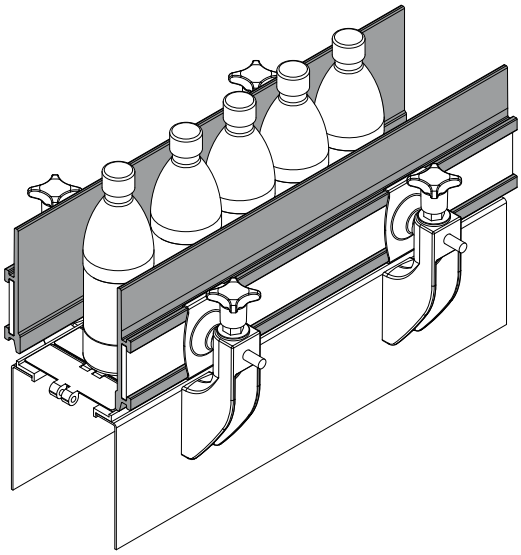

Product guides and accessories

Guide rail (round)
(with metal profile)

Part. **373**

Example of application

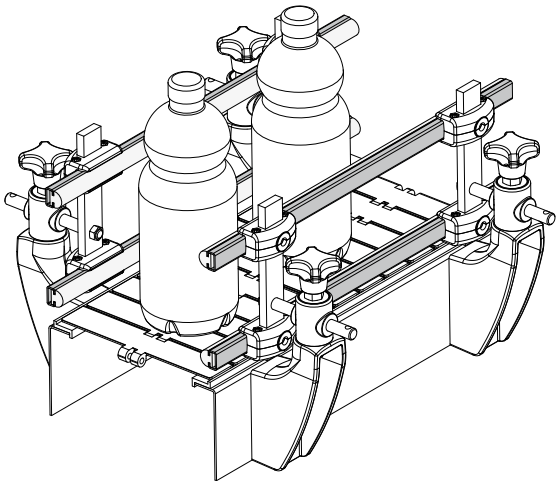

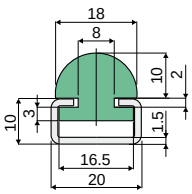

With profile and guide

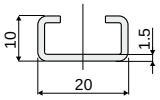

Only profile

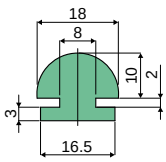

Only guide

Length	With profile and guide	
	Metal profile in zinc plated steel	Metal profile in stainless steel AISI 304
	Code	Code
3 Mt.	**373 / 83732**	**373 / 83733**
6 Mt.	**373 / 83734**	**373 / 83735**

Length	Only profile	
	Metal profile in zinc plated steel	Metal profile in stainless steel AISI 304
	Code	Code
3 Mt.	**373 / 83879**	**373 / 84303**

Length	Only guide
	Code
3 Mt.	**373 / 83882**

MATERIALS: Extruded HMWPE green colour, metal profile in stainless steel AISI 304 or zinc plated.

- BOX QUANTITY:
- **3 Mt. lengths version:** This item is sold in Mt. - Min. 6 Mt. (2 lengths);
- **6 Mt. lengths version:** This item is sold in Mt. - Min. 12 Mt. (2 lengths).

Guide rail (round)
(with metal profile)

Part. **354**

Example of application

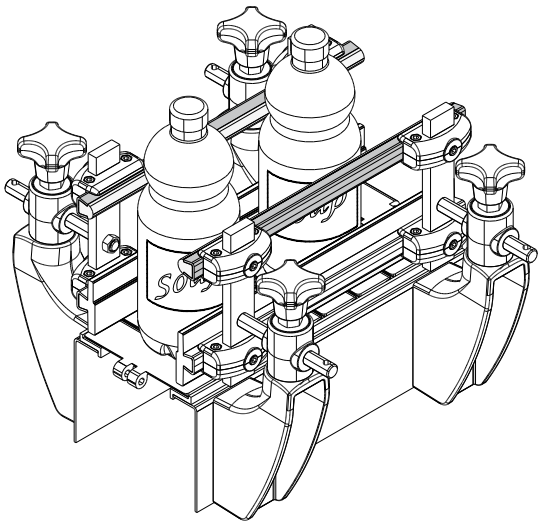

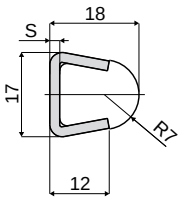

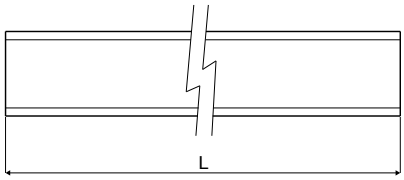

Code	Colour	S	L
354 / 84198	Polyethylene natural	1,5	6000
354 / 84199	Polyethylene natural	1,5	3000
354 / 83442	Polyethylene natural	2	6000
354 / 83626	Polyethylene natural	2	3000
354 / 85484	Blue RAL 5005	1,5	6000
354 / 86726	Blue RAL 5005	1,5	3000
354 / 85488	Blue RAL 5005	2	6000
354 / 85486	Blue RAL 5005	2	3000

MATERIALS: Plastic profile in polyethylene natural or blue colour; metal profile in stainless steel AISI 304.

FEATURES: Supplied already assembled in lengths of 3 or 6 meters.

BOX QUANTITY: 2 bars of 6 Mt. (total 12 Mt.), or 2 bars of 3 Mt. (total 6 Mt.).

ON REQUEST:

- **Box quantity:** According to your request.

Product guides and accessories

Part. 418 Product guide rail
(with metal profile)

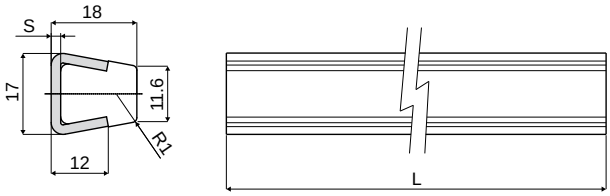

Code	S	L
418 / 84800	1,5	6000
418 / 84802	1,5	3000
418 / 84801	2	6000
418 / 84803	2	3000

MATERIALS: Guide profile in natural polyethylene; metal profile in stainless steel AISI 304.
FEATURES: Supplied in lengths of 3 or 6 Mt.
BOX QUANTITY: 2 lengths of 6 Mt. (total 12 Mt.), or 2 lengths of 3 Mt. (total 6 Mt.).
ON REQUEST:
- Box quantity: According to your request.

Example of application

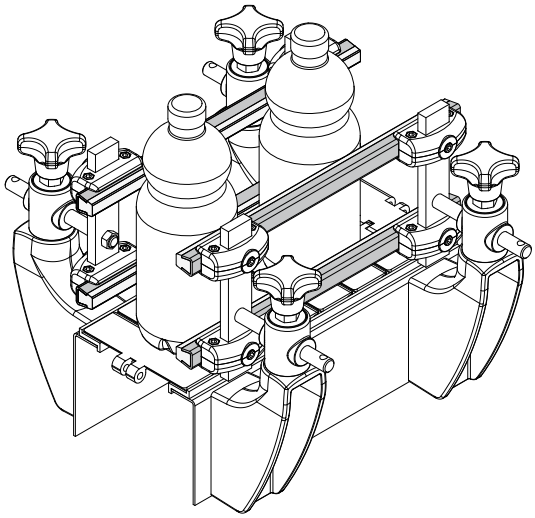

Example of application

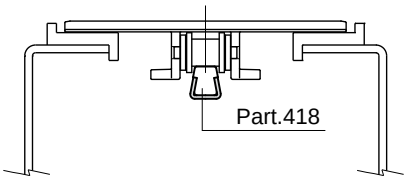

Part. 419 Product guide rail
(with metal profile)

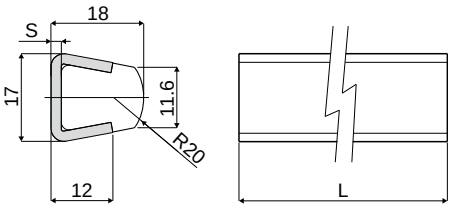

Code	S	L
419 / 84804	1,5	6000
419 / 84806	1,5	3000
419 / 84805	2	6000
419 / 84807	2	3000

MATERIALS: Guide profile in natural polyethylene; metal profile in stainless steel AISI 304.
FEATURES: Supplied in lengths of 3 or 6 Mt.
BOX QUANTITY: 2 lengths of 6 Mt. (total 12 Mt.), or 2 lengths of 3 Mt. (total 6 Mt.).
ON REQUEST:
- Box quantity: According to your request.

Example of application

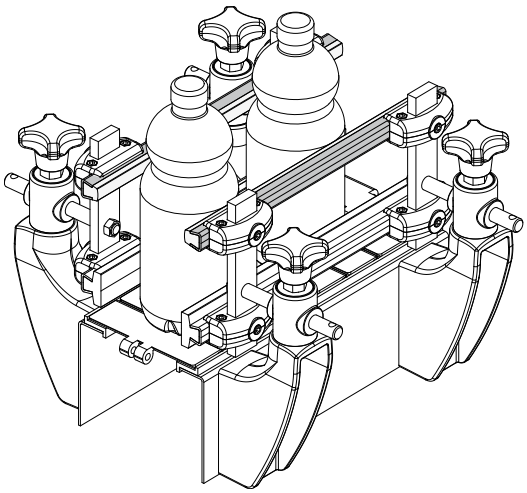

Product guides and accessories

Example of application

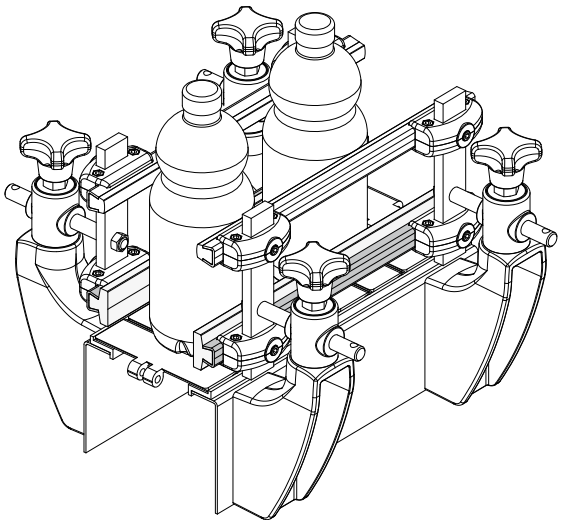

Example of application

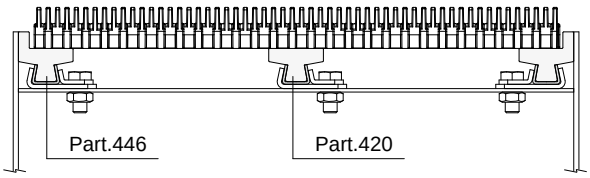

Example of application

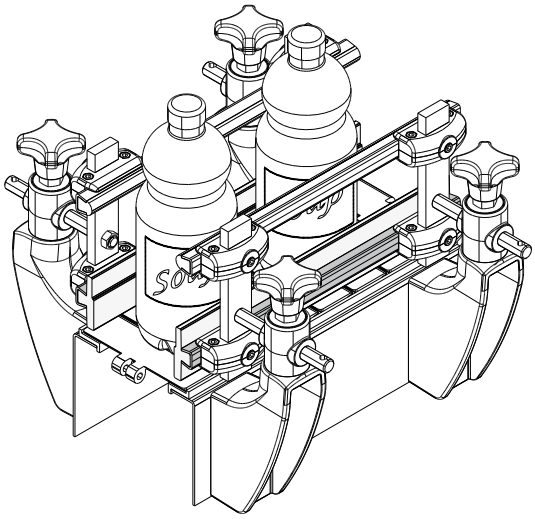

Side guide rail, flat type
(with metal profile)

Part. **420**

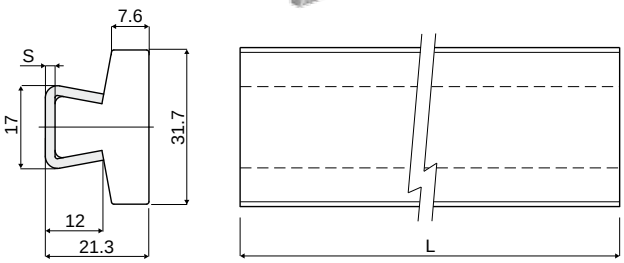

Code	S	L
420 / 84808	1,5	6000
420 / 84810	1,5	3000
420 / 84809	2	6000
420 / 84811	2	3000

MATERIALS: Guide profile in natural polyethylene; metal profile in stainless steel AISI 304.
FEATURES: Supplied in lengths of 3 or 6 Mt.
BOX QUANTITY: 2 lengths of 6 Mt. (total 12 Mt.), or 2 lengths of 3 Mt. (total 6 Mt.).
ON REQUEST:

- Box quantity: According to your request.

Guide rail
(with metal profile)

Part. **353**

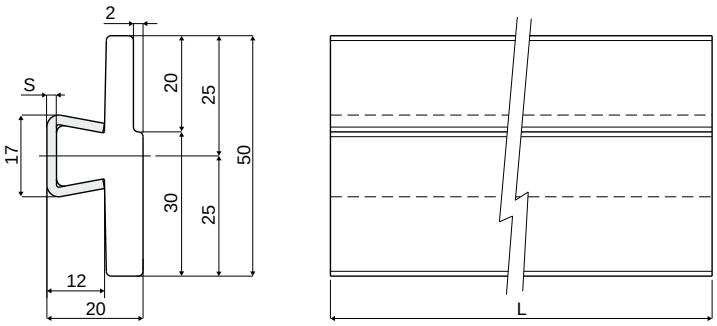

Code	S	L
353 / 84196	1,5	6000
353 / 84197	1,5	3000
353 / 83441	2	6000
353 / 83881	2	3000

MATERIALS: Plastic profile in polyethylene natural colour; metal profile in stainless steel AISI 304.
FEATURES: Supplied already assembled in lengths of 3 or 6 meters.
BOX QUANTITY: 2 bars of 6 Mt. (total 12 Mt.), or 2 bars of 3 Mt. (total 6 Mt.).
ON REQUEST:

- Box quantity: According to your request.

Product guides and accessories

Part. 469 Side guide rail, flat type
(with metal profile)

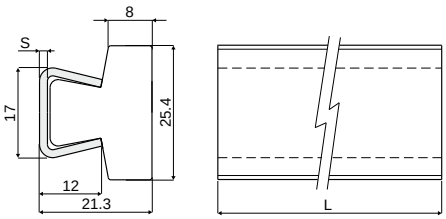

Code	S	L
469 / 85588	1,5	6000
469 / 85589	1,5	3000
469 / 85590	2	6000
469 / 85591	2	3000

MATERIALS: Guide profile made of HD polyethylene natural; metal profile in stainless steel AISI 304.
FEATURES: Supplied in lengths of 3 or 6 Mt.
BOX QUANTITY: 2 lengths of 6 Mt. (total 12 Mt.), or 2 lengths of 3 Mt. (total 6 Mt.).
ON REQUEST:
- Box quantity: According to your request.

Part. 485 Side guide rail, flat type
(with metal profile)

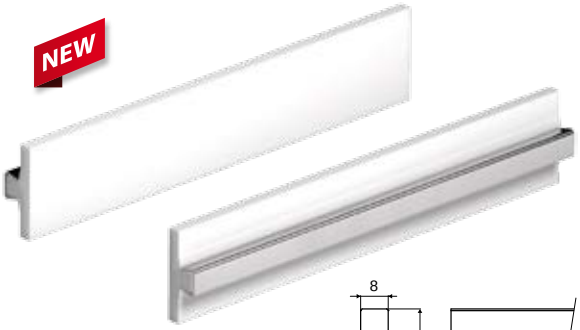

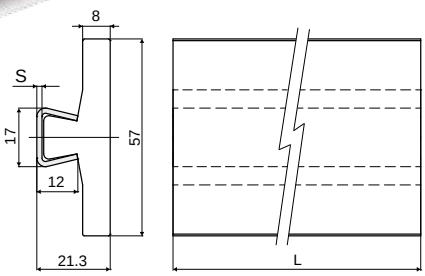

Code	S	L
485 / 86163	1,5	6000
485 / 86164	1,5	3000
485 / 86165	2	6000
485 / 86166	2	3000

MATERIALS: Guide profile made of HD polyethylene natural; metal profile in stainless steel AISI 304.
FEATURES: Supplied in lengths of 3 or 6 Mt.
BOX QUANTITY: 2 lengths of 6 Mt. (total 12 Mt.), or 2 lengths of 3 Mt. (total 6 Mt.).
ON REQUEST:
- Box quantity: According to your request.

Example of application

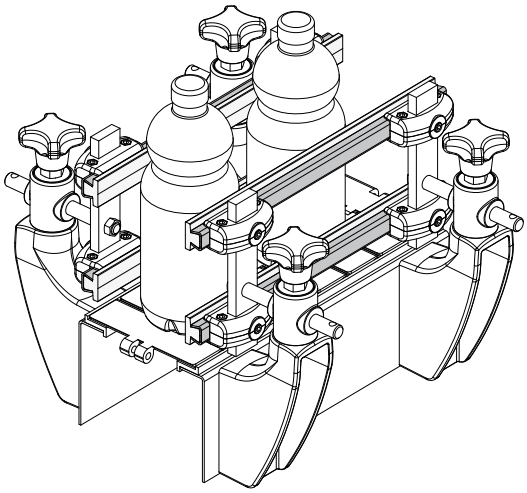

Chain guides and accessories

Example of application

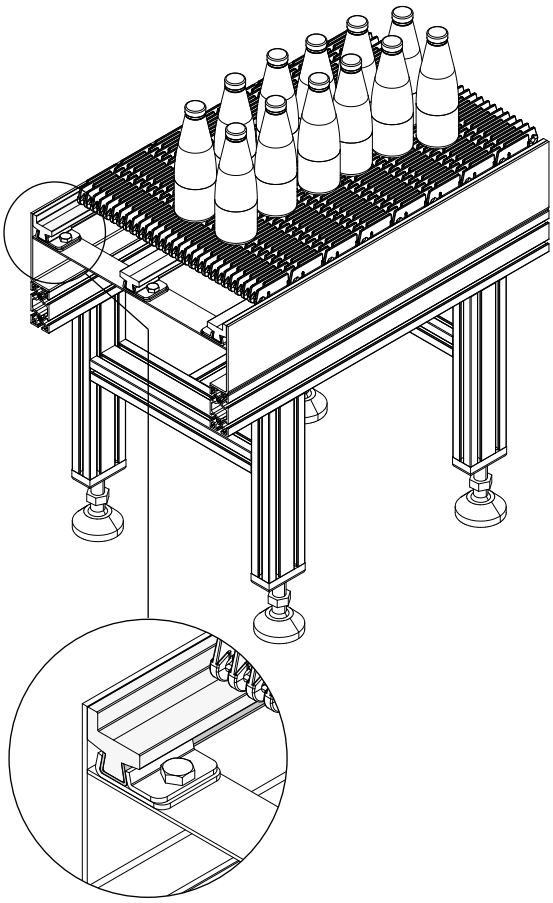

Example of application

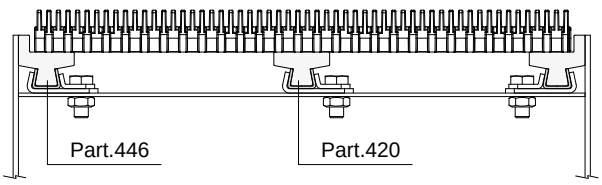

Example of application

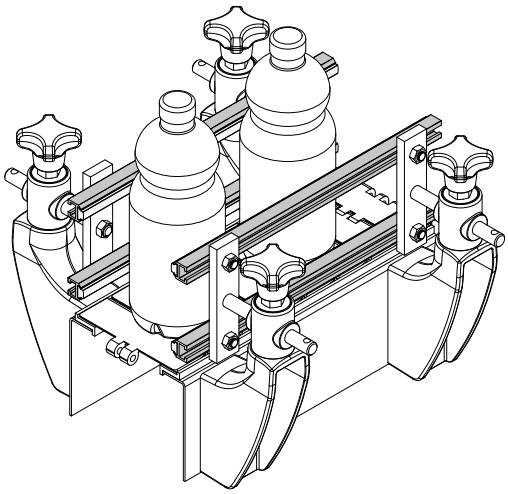

Guide rail (with metal profile) Part. 446

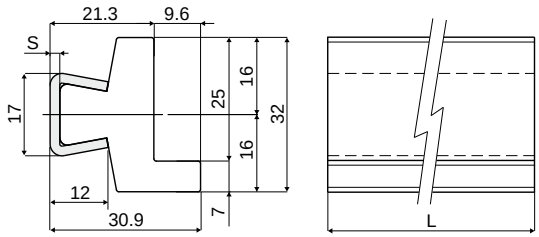

Code	S	L
446 / 85355	1,5	6000
446 / 85356	1,5	3000
446 / 85358	2	6000
446 / 85357	2	3000

MATERIALS: Plastic profile in polyethylene natural colour; metal profile in stainless steel AISI 304.
FEATURES: Supplied already assembled in lengths of 3 or 6 meters.
BOX QUANTITY: 2 bars of 6 Mt. (total 12 Mt.), or 2 bars of 3 Mt. (total 6 Mt.).
ON REQUEST:

- **Box quantity:** According to your request.

Guide rail (semicircular) Part. 438

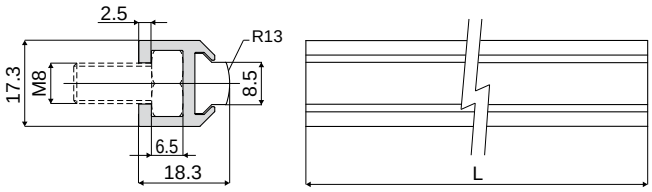

Code	L
438 / 85237	3000
438 / 85238	6000

MATERIALS: Guide profile in UHMWPE white colour, metal profile in anodized aluminium.
BOX QUANTITY: 2 lengths of 6 Mt. (total 12 Mt.), or 2 lengths of 3 Mt. (total 6 Mt.).
ON REQUEST:

- **Box quantity:** According to your request.

Chain guides and accessories

Part. 377 Guide rail for high temperatures
(with metal profile)

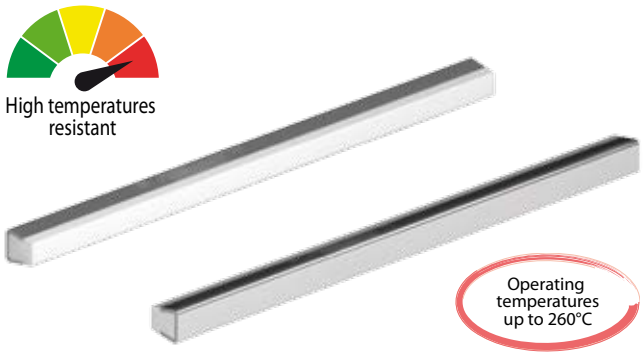

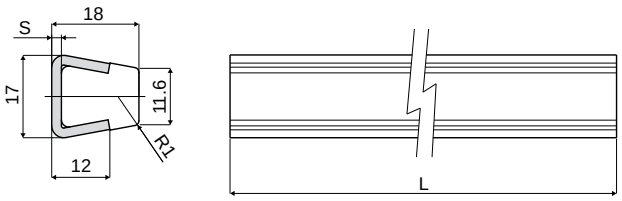

Code	S	L
377 / 85476	1,5	3000
377 / 83973	2	3000

MATERIALS: Guide profile in PTFE (Teflon) natural colour; metal profile in stainless steel AISI 304.

FEATURES: To be used in every application where the resistance to the high temperatures is needed; for example: ovens, fryers, filling areas with high temperature, steam rooms, kitchens etc. Supplied in 3 meters lengths.

BOX QUANTITY: 2 bars of 3 meters (total 6 meters).

ON REQUEST:

- **Box quantity:** According to your request.

Example of application

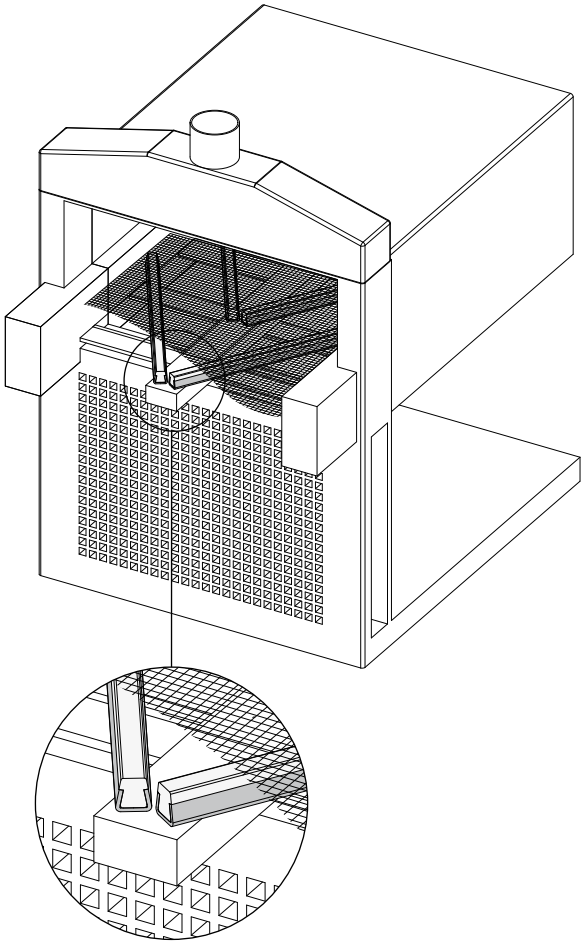

Chain guides and accessories

Example of application

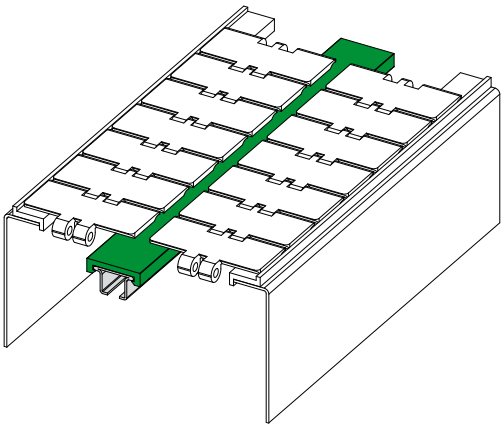

Chain guide profile Part. 381

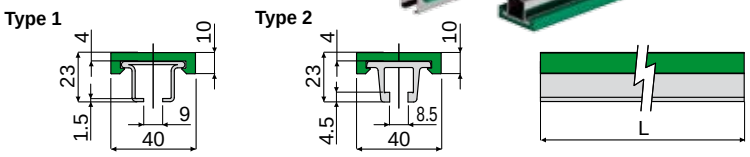

Type 1				Type 2		
Metal profile in stainless steel AISI 304	Metal profile in stainless steel AISI 430			Metal profile in aluminium		
Code	Code	Colour	L	Code	Colour	L
381 / 84085	381 / 84086	Green	3 Mt.	381 / 84474	Green	3 Mt.
381 / 84954	381 / 84955	Green	6 Mt.	381 / 84475	Green	6 Mt.
381 / 84942	381 / 84946	White	3 Mt.	381 / 84944	White	3 Mt.
381 / 84943	381 / 84947	White	6 Mt.	381 / 84945	White	6 Mt.
381 / 84948	381 / 84952	Black	3 Mt.	381 / 84950	Black	3 Mt.
381 / 84949	381 / 84953	Black	6 Mt.	381 / 84951	Black	6 Mt.

MATERIALS: Metal profile in stainless steel AISI 304, AISI 430 or aluminium; guide profile in polyethylene.
FEATURES: Supplied in lengths of 3 or 6 Mt.
BOX QUANTITY: 2 lengths of 6 Mt. (total 12 Mt.), or 2 lengths of 3 Mt. (total 6 Mt.).
ON REQUEST:
- **Guide profiles:** In antistatic material black colour.
- **Box quantity:** According to your request.

Chain guide profile Part. 384

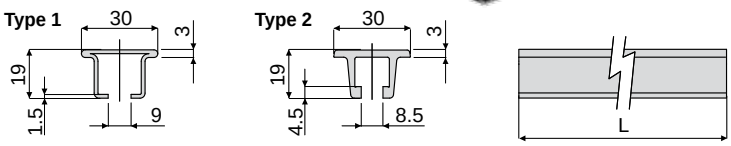

Type 1			Type 2	
Metal profile in stainless steel AISI 304	Metal profile in stainless steel AISI 430		Metal profile in aluminium	
Code	Code	L	Code	L
384 / 84121	384 / 84122	3 Mt.	384 / 84476	3 Mt.
384 / 84956	384 / 84957	6 Mt.	384 / 84477	6 Mt.

MATERIALS: Metal profile in stainless steel AISI 304, AISI 430 or aluminium.
FEATURES: Supplied in lengths of 3 or 6 Mt.
BOX QUANTITY: 2 lengths of 6 Mt. (total 12 Mt.), or 2 lengths of 3 Mt. (total 6 Mt.).
ON REQUEST:
- **Box quantity:** According to your request.

Chain guide profile Part. 385

Code	Colour	L
385 / 84123	Green	3 Mt.
385 / 84478	Green	6 Mt.
385 / 84940	White	3 Mt.
385 / 84577	White	6 Mt.
385 / 84941	Black	3 Mt.
385 / 84578	Black	6 Mt.

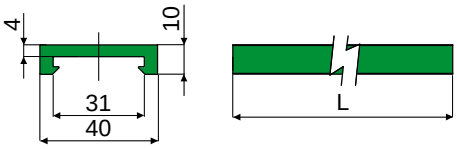

MATERIALS: Guide profile in polyethylene.
FEATURES: Supplied in lengths of 3 or 6 Mt.
BOX QUANTITY: 2 lengths of 6 Mt. (total 12 Mt.), or 2 lengths of 3 Mt. (total 6 Mt.).
ON REQUEST:
- **Guide profiles:** In antistatic material black colour.
- **Box quantity:** According to your request.

Chain guides and accessories

Part. 444 Chain inlet guide shoe
(side)

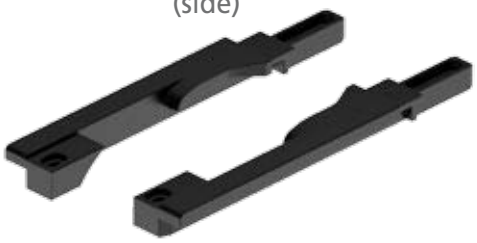

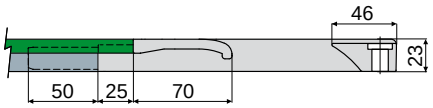

Right Version

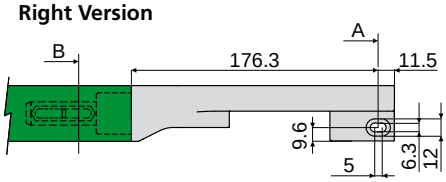

Left Version

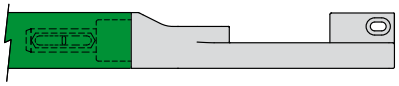

Section B

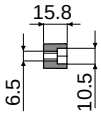

Section A

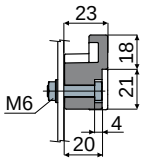

Version	Code
Right	444 / 85308
Left	444 / 85309

MATERIALS: Shoe in black polyamide.
FEATURES: To be assembled near to the idler wheels to drive the chain on the transport guides: Part.381, 384 (excluding versions with aluminium metal profile).
BOX QUANTITY: 24 pieces.
ON REQUEST:
- Shoes: In various colours.
- Box quantity: According to your request.

Example of application

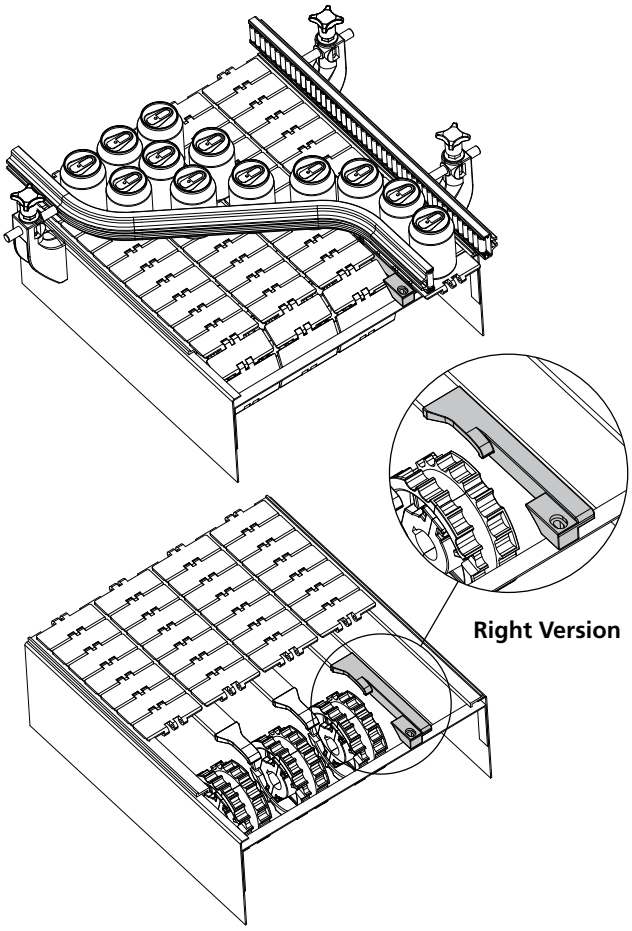

Part. 389 Chain inlet guide shoe
(central)

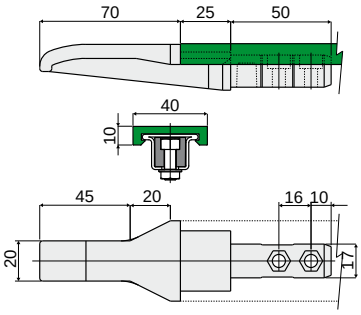

Code
389 / 84165

MATERIALS: Shoe in black polyamide.
FEATURES: To be assembled near to the idler wheels to drive the chain on the transport guides: Part.381, 384 (excluding versions with aluminium metal profile).
BOX QUANTITY: 24 pieces.
ON REQUEST:
- Shoes: In various colours.
- Box quantity: According to your request.

Example of application

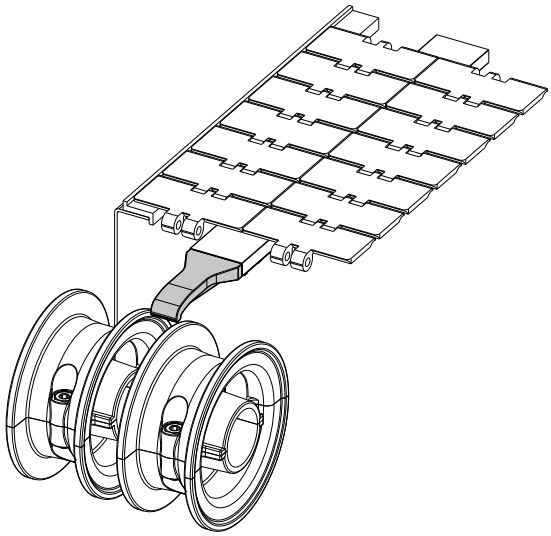

Chain guides and accessories

Mounting block for chain guide profile

Part. **390**

Example of application

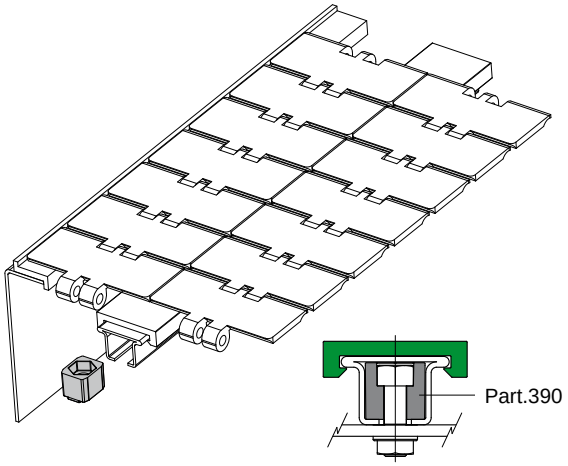

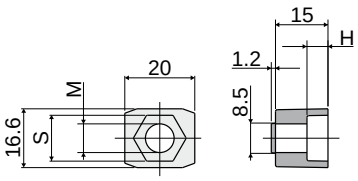

Code	M	H	S
390 / 84166	M6	4.5	10
390 / 84167	M8	6.0	13

MATERIALS: Mounting block in reinforced polyamide, black colour.
FEATURES: To be used for the guide fixing on the frame: Part.381, 384 (excluding versions with aluminium metal profile).
BOX QUANTITY: 96 pieces.
ON REQUEST:
- **Mounting blocks:** In various colours.
- **Box quantity:** According to your request.

Connecting block for chain guide profile

Part. **391**

Example of application

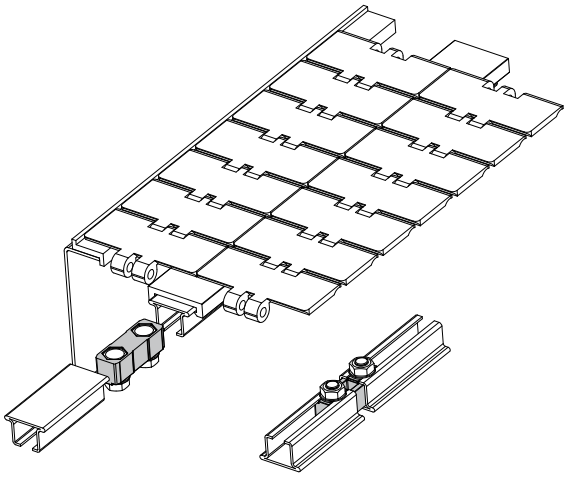

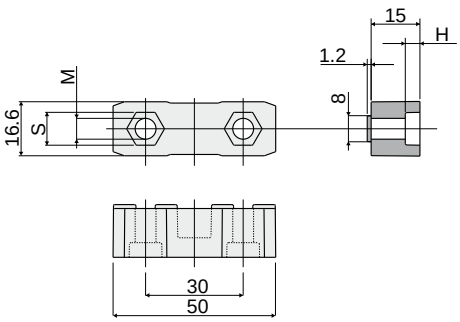

Code	M	H	S
391 / 84168	M6	4.5	10
391 / 84169	M8	6.0	13

MATERIALS: Connecting block in reinforced polyamide, black colour.
FEATURES: To be used to joint the guides: Part.381, 384 (excluding versions with aluminium metal profile).
BOX QUANTITY: 48 pieces.
ON REQUEST:
- **Connecting blocks:** In various colours.
- **Box quantity:** According to your request.

Chain guides and accessories

Part. 461 Hinge joint

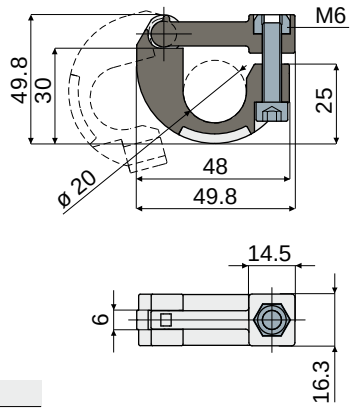

Code
461 / 85473

MATERIALS: Joint in reinforced polyamide black colour; bolts and nuts in stainless steel AISI 304.
FEATURES: To be used to join the guides Part.381, 384; supplied complete with bolts and nuts.
BOX QUANTITY: 8 pieces.
ON REQUEST:
- Joints: In other colours.
- Box quantity: According to your request.

Part. 492 Closing cap
(for chain guide profile Part.381)

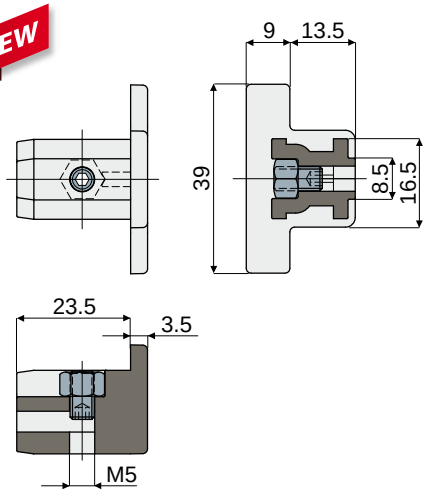

Code
492 / 87013

MATERIALS: Cap in reinforced polyamide grey colour; nut and grub screw in stainless steel AISI 304.
FEATURES: To be used as a closure cap at the extremities of the central guides Part.381.
BOX QUANTITY: 24 pieces.
ON REQUEST:
- Assembling of: Nuts and grab screws.
- Box quantity: According to your request.

Example of application

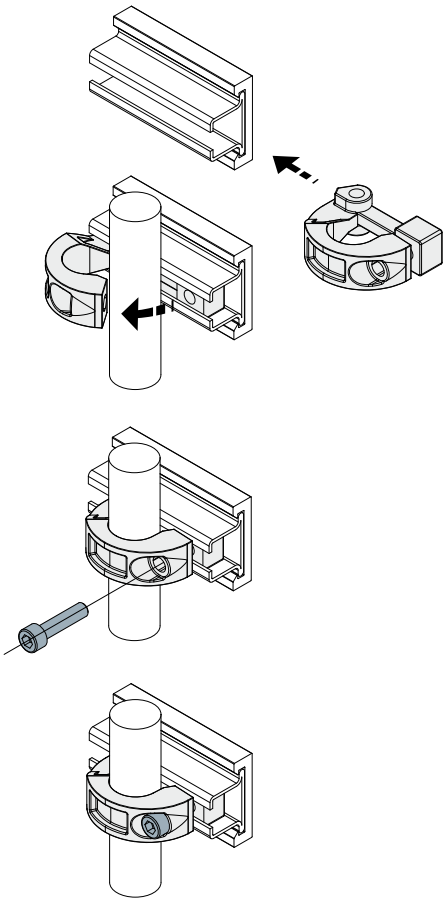

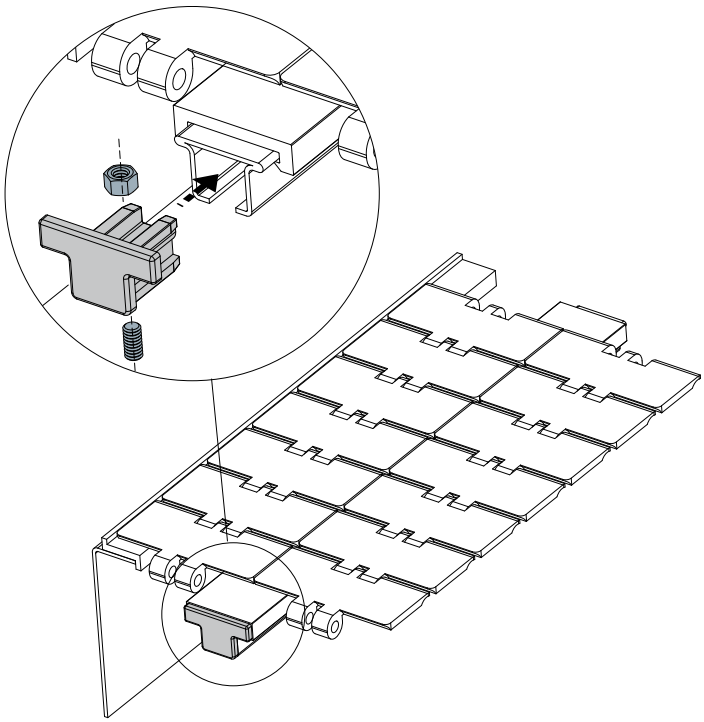

Example of application

Chain guides and accessories

Example of application

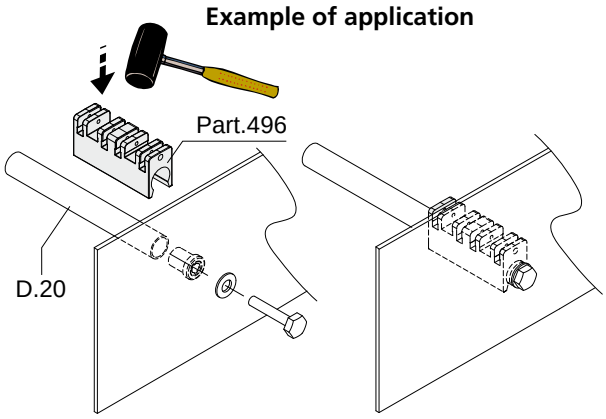

Spacer for chain return

(open version, for round tubes)

Part. **496**

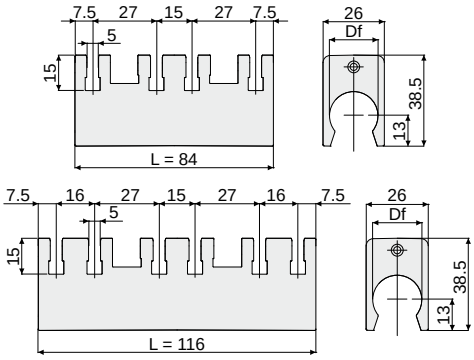

Df Bore for round tubes of (mm)	L	Code
20	84	496 / 87017
	116	496 / 87018

MATERIALS: Spacer in polyamide black colour.
FEATURES: To be used together with the sliding profile Part.499.
BOX QUANTITY: 24 pieces.
ON REQUEST:
- **Spacers:** In various colours.
- **Box quantity:** According to your request.

Example of application

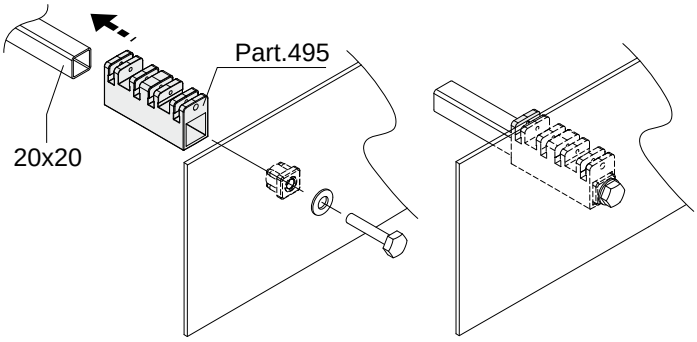

Spacer for chain return

(closed version, for square tubes)

Part. **495**

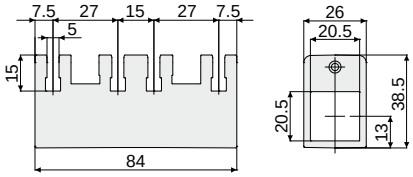

Code
495 / 87016

MATERIALS: Spacer in polyamide black colour.
FEATURES: To be used together with the sliding profile Part.499.
BOX QUANTITY: 24 pieces.
ON REQUEST:
- **Spacers:** In various colours.
- **Box quantity:** According to your request.

Example of application

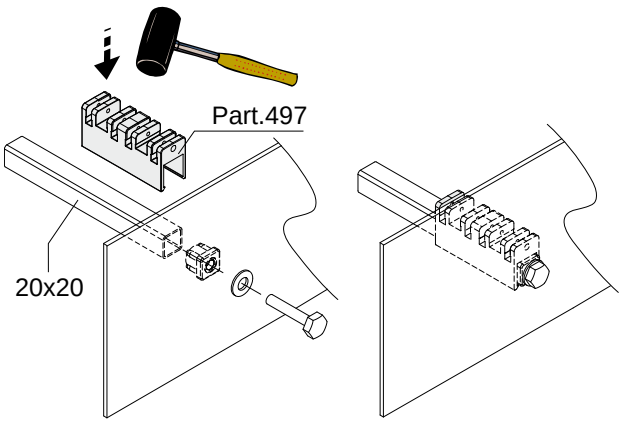

Spacer for chain return

(open version, for square tubes)

Part. **497**

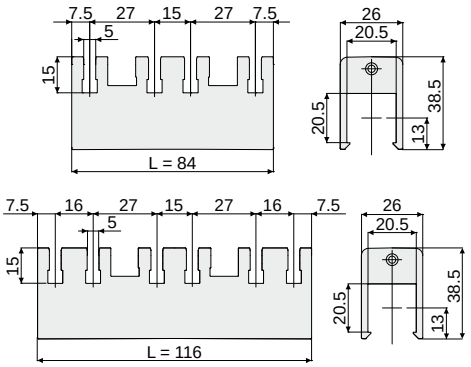

Df Bore for square tubes of (mm)	L	Code
20x20	84	497 / 87019
	116	497 / 87020

MATERIALS: Spacer in polyamide black colour.
FEATURES: To be used together with the sliding profile Part.499.
BOX QUANTITY: 24 pieces.
ON REQUEST:
- **Spacers:** In various colours.
- **Box quantity:** According to your request.

Chain guides and accessories

Part. 471 Shoe for chain return

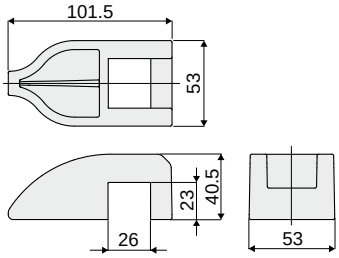

Code
471 / 85796

MATERIALS: Shoe is made of HD polyethylene green colour.
FEATURES: To be used together with the spacers Part.495, 496, 497 and with the profile Part.499. Pressure mounting.
BOX QUANTITY: 24 pieces.
ON REQUEST:
- **Shoes:** In various colours.
- **Box quantity:** According to your request.

Part. 498 Striker

NEW

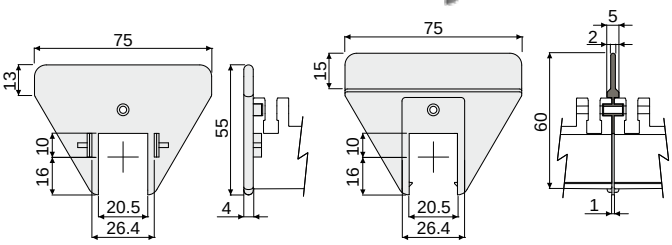

Type	Code
Side	498 / 87021
Central	498 / 87022

MATERIALS: Striker in polyamide black colour.
FEATURES: To be used together with the spacers Part.495, 496, 497.
BOX QUANTITY: 24 pieces.
ON REQUEST:
- **Strikers:** In various colours.
- **Box quantity:** According to your request.

Part. 499 Sliding profile

NEW

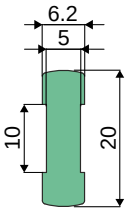

Code
499 / 87023

MATERIALS: Extruded polyethylene green colour.
FEATURES: To be used together with the spacers Part.495, 496, 497.
BOX QUANTITY: This item is sold in Mt. - Min. 60 Mt.
ON REQUEST:
- **Profiles:** Different colours and lengths.
- **Box quantity:** According to your request.

Example of application

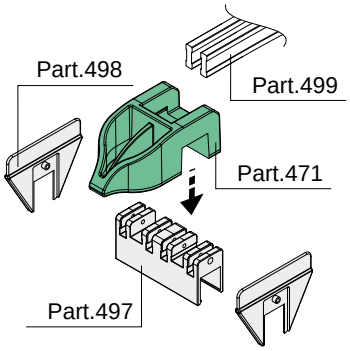

Example of application

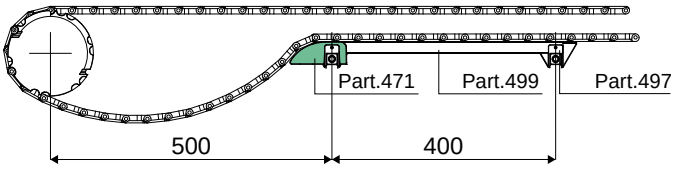

Example of application

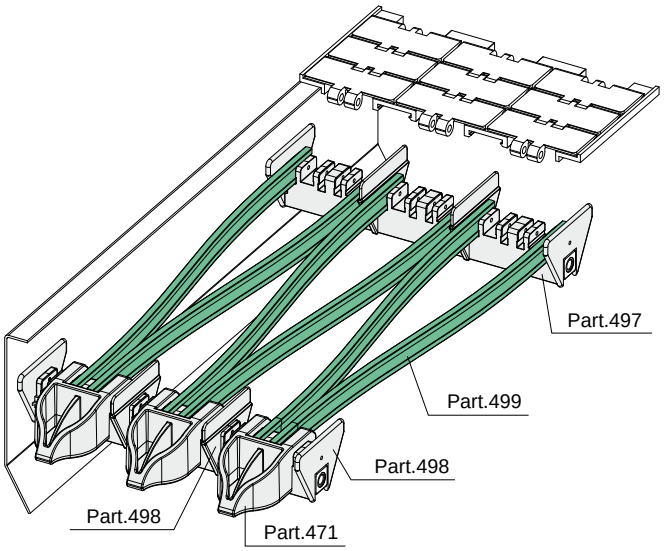

Example of mounting

Chain width 82,5 mm

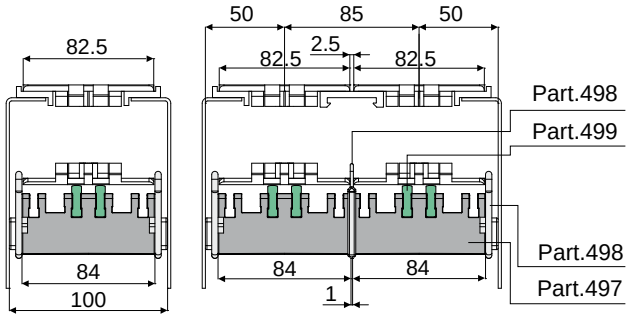

Chain width 114,3 mm

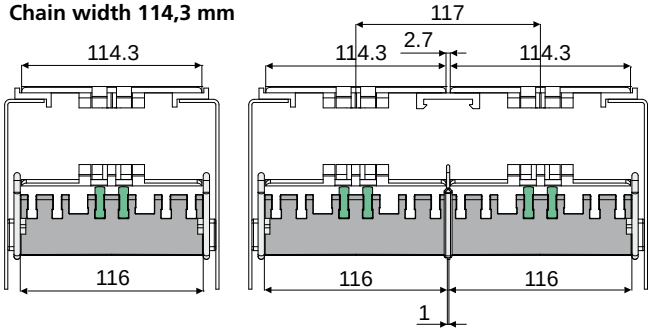

Process control

Scanning lever Part. 360

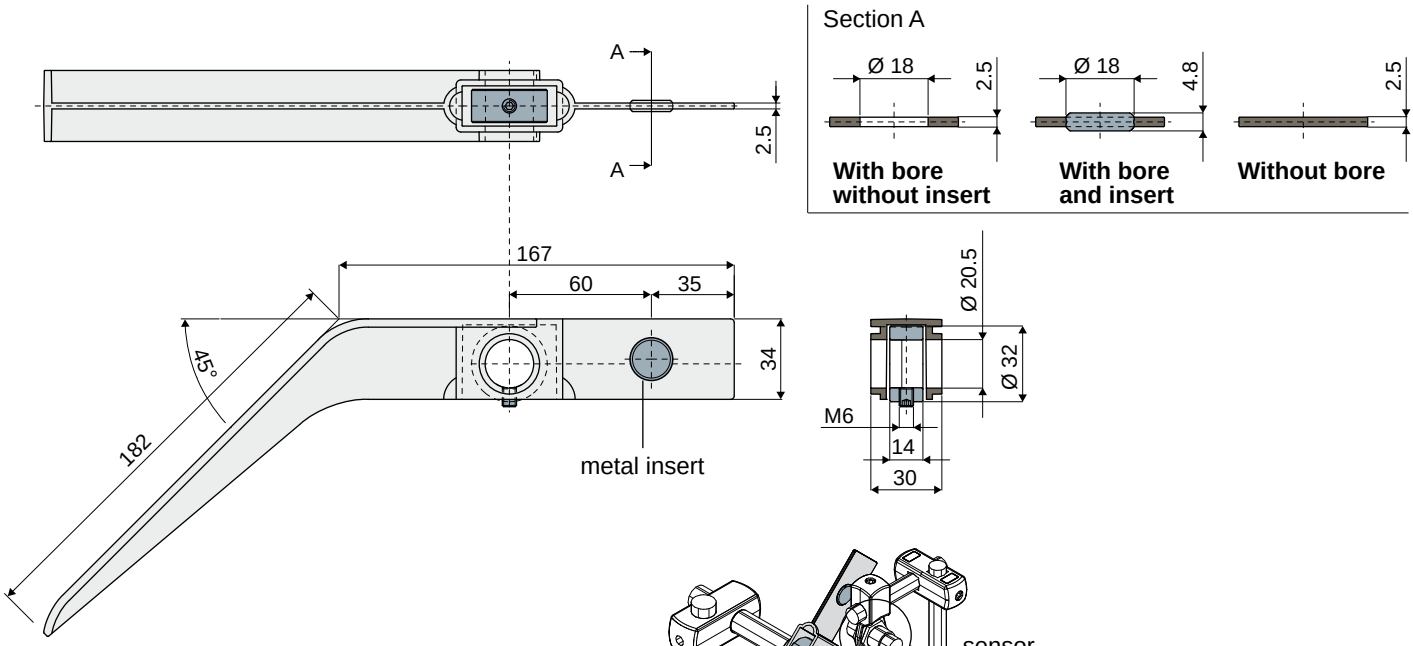

Stop ring in zinc plated steel		
Without bore	With bore without sensor insert	With bore and sensor insert
Code	Code	Code
360 / 83606	360 / 83607	360 / 83608

Stop ring in stainless steel AISI 304		
Without bore	With bore without sensor insert	With bore and sensor insert
Code	Code	Code
360 / 84091	360 / 85184	360 / 85185

MATERIALS: Scanning lever in reinforced polyamide black colour; grain and collar in zinc-plated steel or stainless steel AISI 304.
FEATURES: Supplied assembled.
To be used in the surveying of the packaged products.
BOX QUANTITY: 24 pieces.
ON REQUEST:

- Scanning levers: Versions without stop ring nor sensor insert; in different colours.
- Box quantity: According to your request.

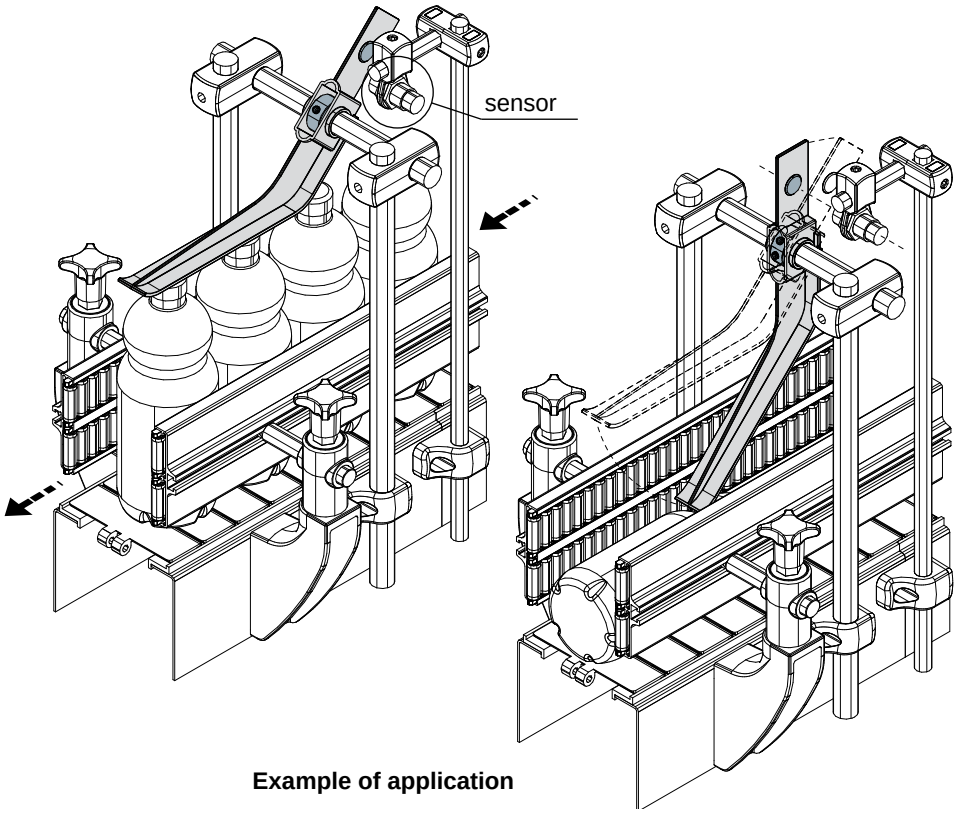

Example of application

Accessories for the cross adjustment of the side guides

Part. 429 Spacer
(for conveyors' section)

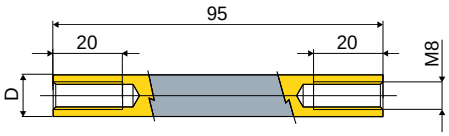

D (mm)	Code
12	429 / 85065
16	429 / 85066

MATERIALS: Spacers in Stainless steel AISI 304.
FEATURES: To be used to fix the frame in the conveyor system.
BOX QUANTITY: 24 pieces.
ON REQUEST:
- Box quantity: According to your request.

Example of application

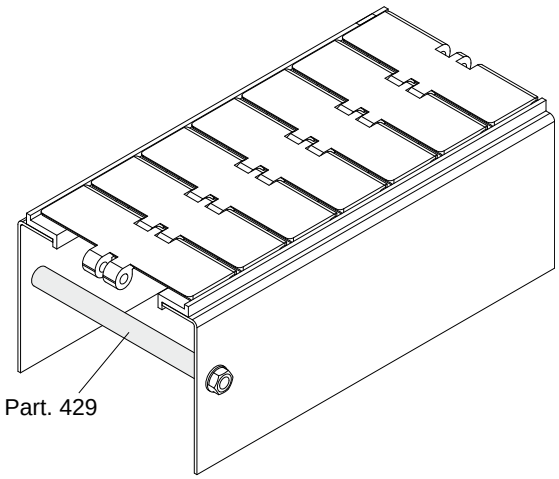

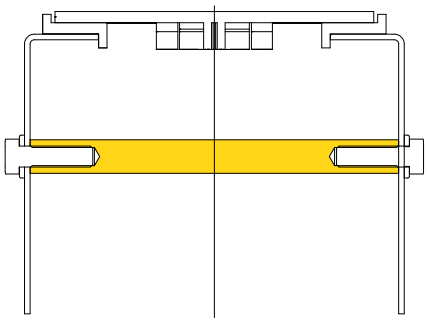

Part. 316 Spacer for rail-holder cylinder

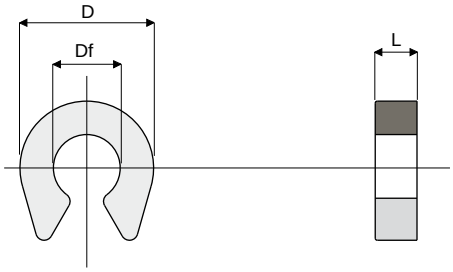

Df Bore diameter (mm)	D (mm)	L (mm)	Code
8	16	2,5	316 / 82871
8	16	5	316 / 82872

MATERIALS: Spacer made of polyamide black colour.
FEATURES: To be used as spacer for the stroke regulation of rail-holder pneumatic cylinder.
Snap-on assembly on 8 mm diameter spindles.
BOX QUANTITY: 96 pieces.
ON REQUEST:
- Spacers: With special bores and sizes.
- Box quantity: According to your request.

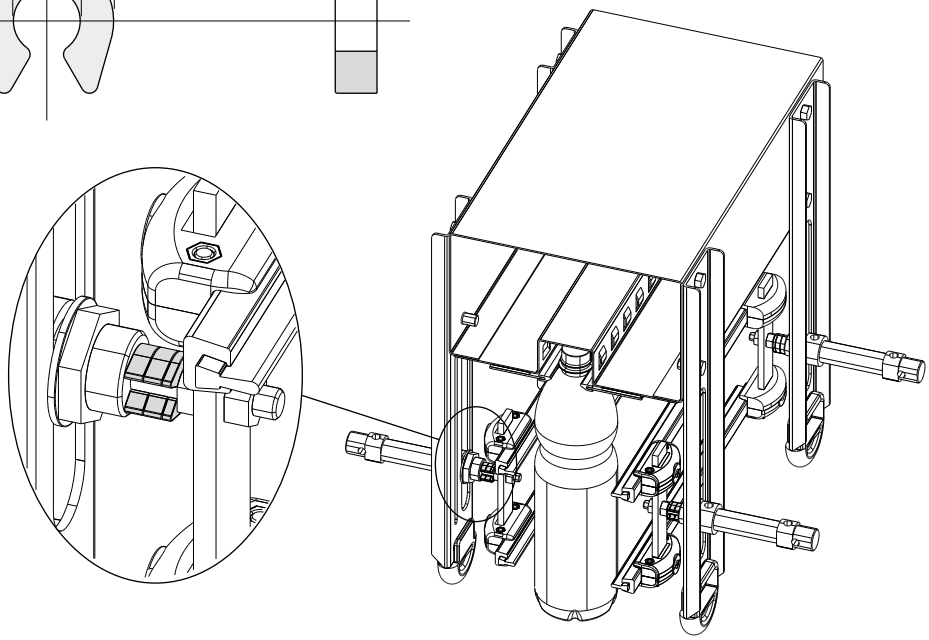

Example of application

Accessories for the cross adjustment of the side guides

Reducer for Racks
(for the cross adjustment of the side guides)

Part. **299**

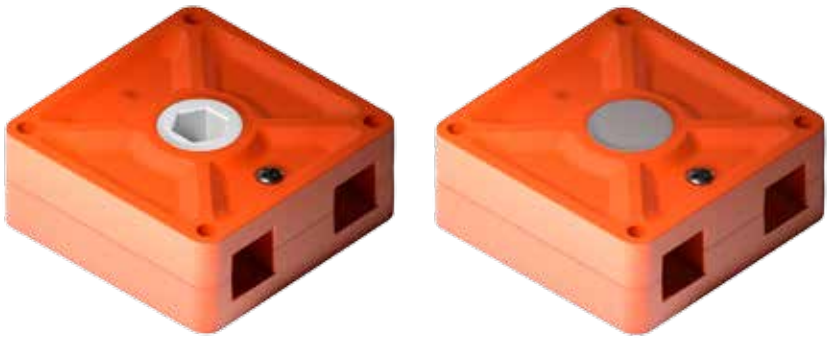

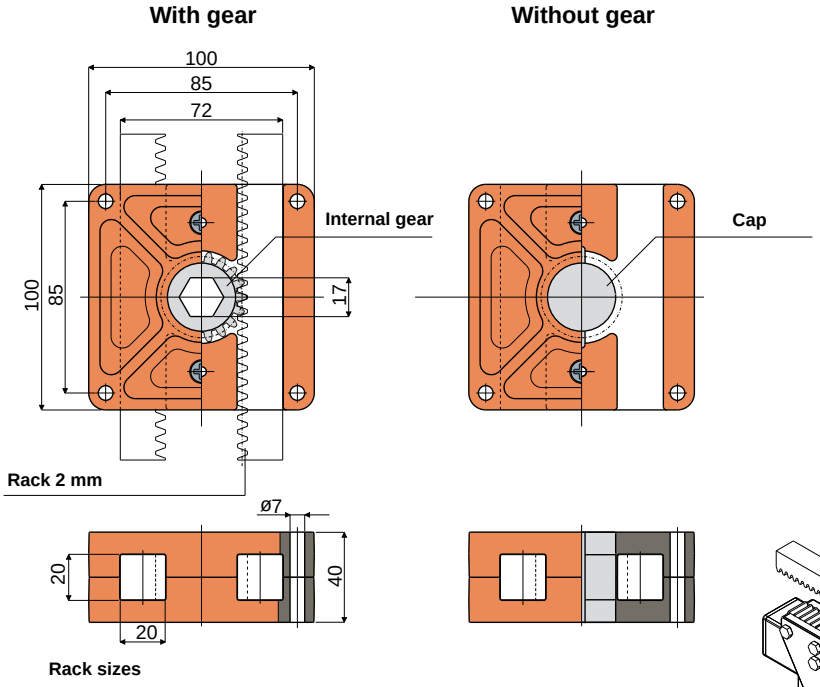

Example of application

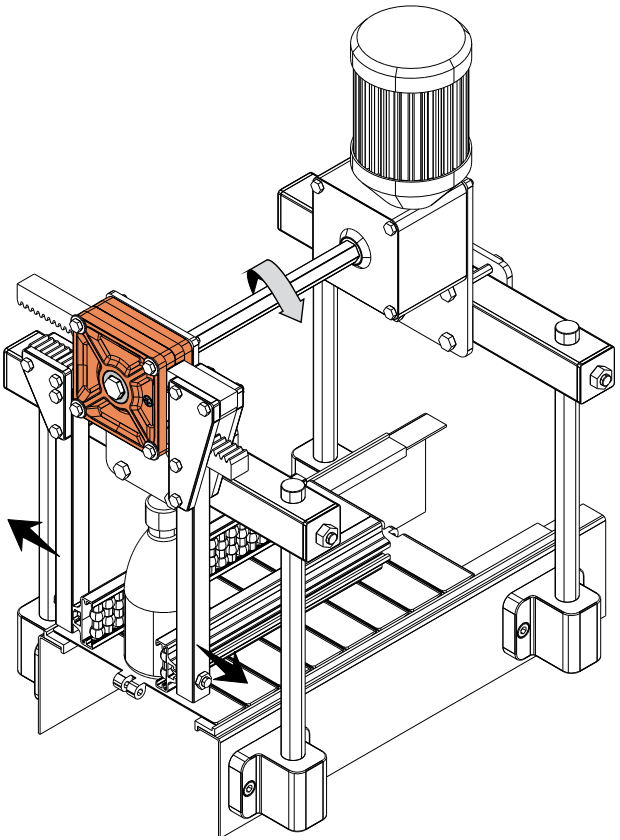

Internal gear made of acetal	Internal gear made of brass	Without gear
Code	Code	Code
299 / 82681	299 / 83378	299 / 82680

MATERIALS: External body of reducer is made of reinforced polyamide orange colour; self-threading screw is made of stainless steel AISI 304.
Available: without internal gear; with internal gear made of acetal, white colour; with internal gear made of brass.
FEATURES: To be used for the cross adjustment of the side guides while changing the size of the conveyed product.
BOX QUANTITY: 24 pieces.
ON REQUEST:

- Reducers: In different colours.
- Box quantity: According to your request.

Accessories for the cross adjustment of the side guides

Part. 331 Reference peg for size changing

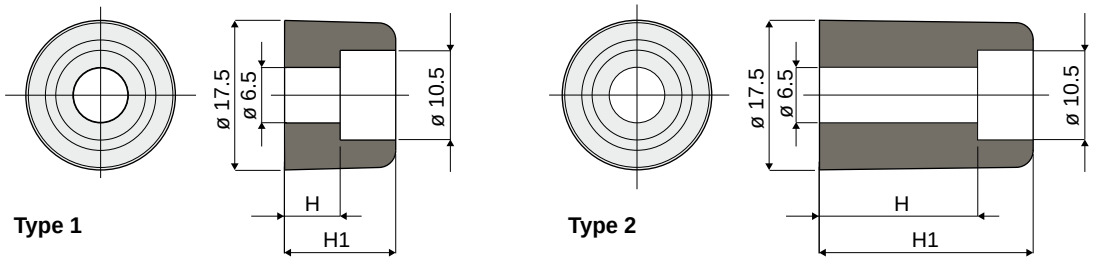

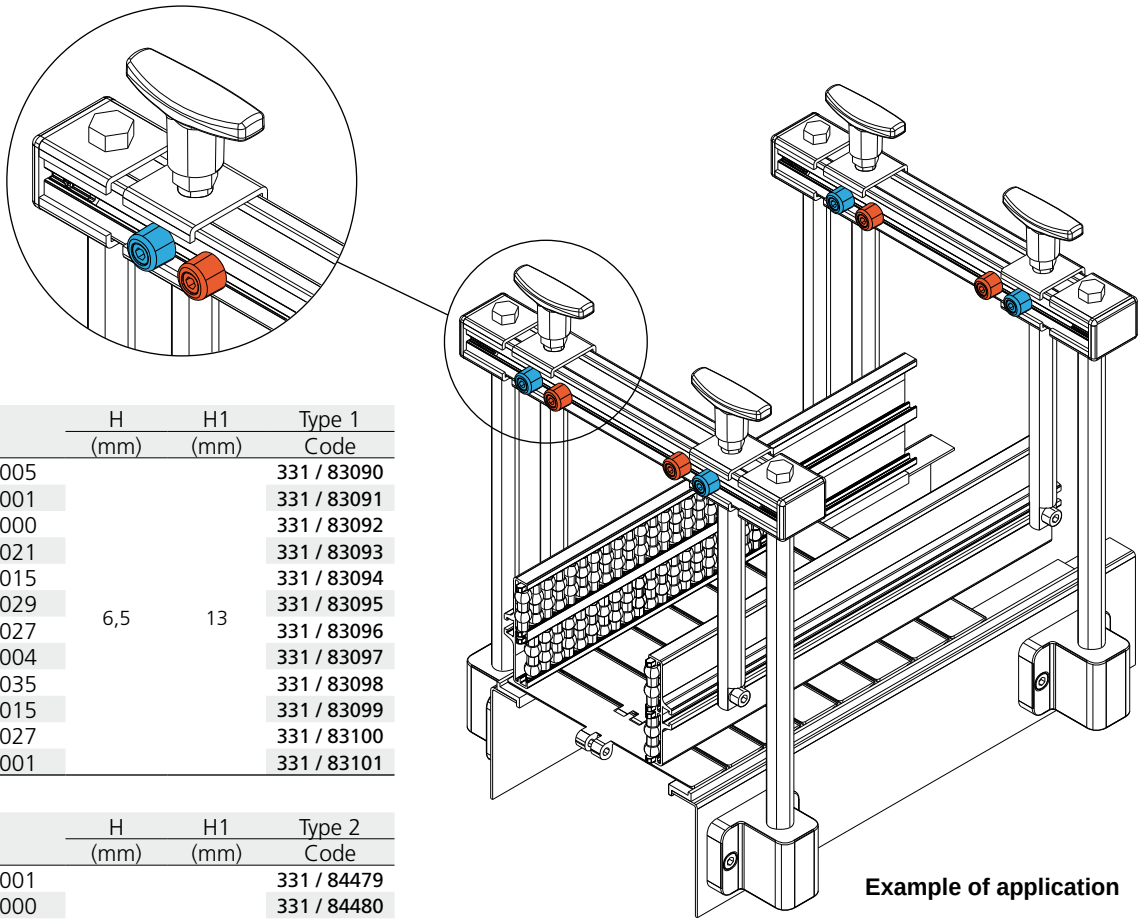

Example of application

Colour	H (mm)	H1 (mm)	Type 1 Code
Black RAL 9005	6,5	13	331 / 83090
White RAL 9001			331 / 83091
Red RAL 3000			331 / 83092
Yellow RAL 1021			331 / 83093
Blue RAL 5015			331 / 83094
Green RAL 6029			331 / 83095
Mustard RAL 1027			331 / 83096
Orange RAL 2004			331 / 83097
Grey RAL 7035			331 / 83098
Pink RAL 3015			331 / 83099
Light blue RAL 6027			331 / 83100
Brown RAL 8001			331 / 83101

Colour	H (mm)	H1 (mm)	Type 2 Code
White RAL 9001	18,5	25	331 / 84479
Red RAL 3000			331 / 84480
Yellow RAL 1021			331 / 84483
Blue RAL 5015			331 / 84482
Green RAL 6029			331 / 84481

MATERIALS: Peg in reinforced polypropylene.
FEATURES: To be used as a reference on the transport guides for size changing.
BOX QUANTITY: 96 pieces.
ON REQUEST:

- **Pegs:** Can be produced in other colours.
- **Box quantity:** According to your request.

Accessories for the cross adjustment of the side guides

Spacer for guide rail pin

Part. **352**

Type 1

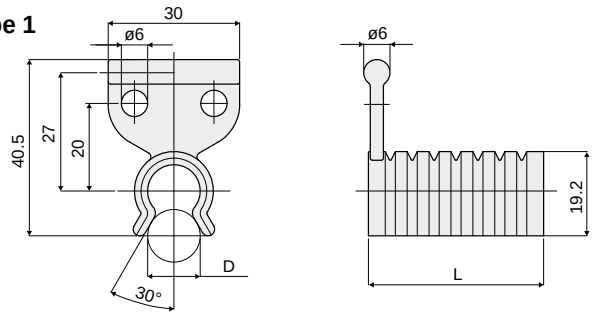

Type 2

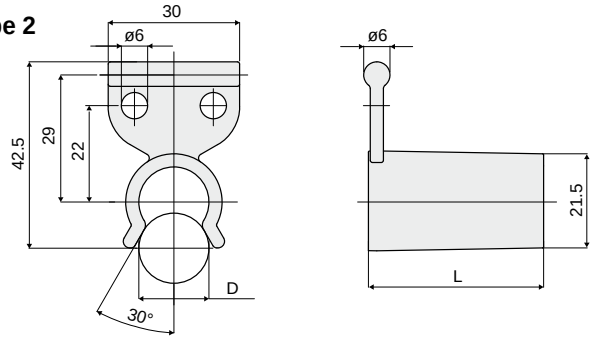

Example of applications

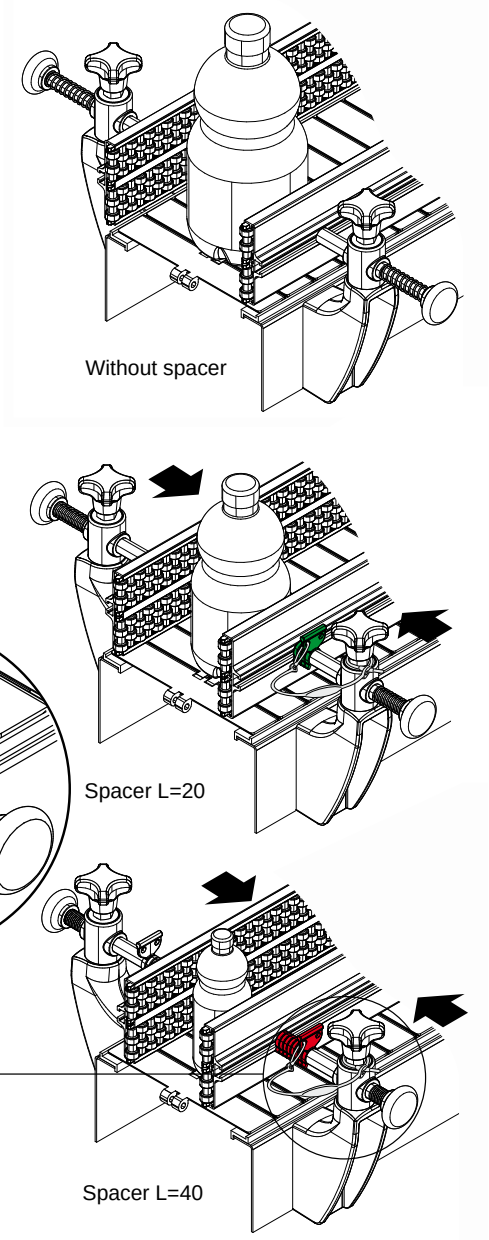

D (mm)	L (mm)	Colour	Type 1 Code
12	5	White RAL 9001	352 / 83419
	10	Red RAL 3000	352 / 83420
	15	Black RAL 9005	352 / 83421
	20	Green RAL 6029	352 / 83422
	25	Yellow RAL 1021	352 / 83423
	30	Orange RAL 2004	352 / 83424
	35	Blue RAL 5015	352 / 83425
	40	White RAL 9001	352 / 83411
		Red RAL 3000	352 / 83412
		Black RAL 9005	352 / 83413
		Green RAL 6029	352 / 83414
		Yellow RAL 1021	352 / 83415
		Orange RAL 2004	352 / 83416
		Blue RAL 5015	352 / 83417
		Grey RAL 7035	352 / 83418

D (mm)	L (mm)	Colour	Type 2 Code
16	40	White RAL 9001	352 / 84444
		Red RAL 3000	352 / 84445
		Green RAL 6029	352 / 84446
		Yellow RAL 1021	352 / 85569
		Blue RAL 5015	352 / 85570

MATERIALS: Spacer in polypropylene.
FEATURES: To be used to adjust the distance between the side guides. Snap-on assembly. Available in different lengths and colours.
BOX QUANTITY: 24 pieces.
ON REQUEST:

- **Spacers:** Other colours.
- **Box quantity:** according to your request.

Accessories for the cross adjustment of the side guides

Part. 462 Safety string

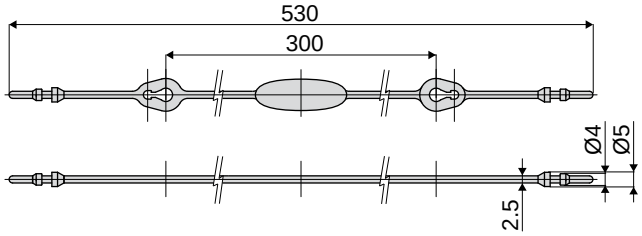

Code
462 / 85548

MATERIALS: String made of black polyamide.
FEATURES: To be used to tie Part.352 together with Part.374.
BOX QUANTITY: 24 pieces.
ON REQUEST:
- Strings: In different colours.
- Box quantity: According to your request.

Part. 374 Guide rail pin
(for the quick adjustment of the side guides)

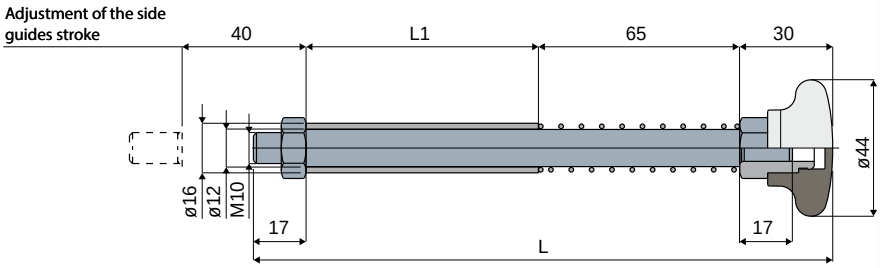

Example of application

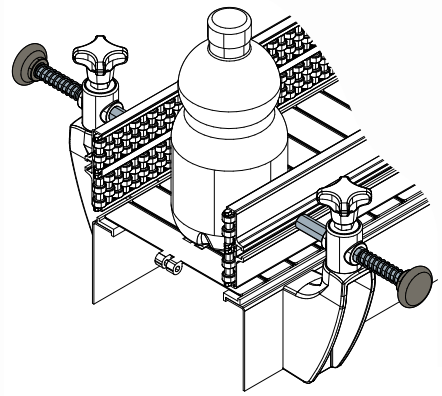

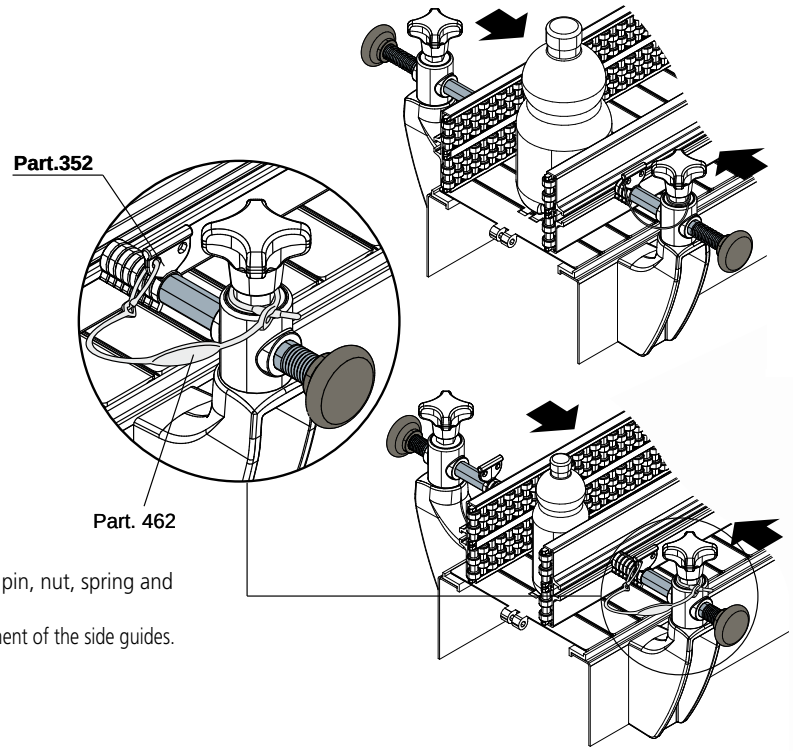

L	L1	Code
187	75	374 / 83860
237	125	374 / 85977

MATERIALS: Handle made of reinforced polyamide, black colour; pin, nut, spring and dinghy in stainless steel AISI 304; bushing in nickel plated brass.
FEATURES: To be used together with our Part.352, for the quick adjustment of the side guides.
BOX QUANTITY: 24 pieces.
ON REQUEST:
- Pins: In different lengths; with M8 thread instead of M10.
- Box quantity: According to your request.

Product guides and accessories

Extruded product guide rails in coils of 50 Mt. Part. 370

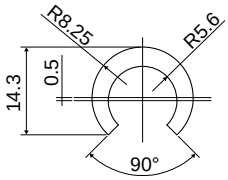

Code
370 / 83726

MATERIALS: Extruded HMWPE white colour.
BOX QUANTITY: This item is sold in Mt. - Min. 50 Mt.
FEATURES: To be used with 12 mm diameter rods.
ON REQUEST:
- **Guide rails:** Different colours and lengths.

Extruded product guide rails in coils of 50 / 60 Mt. Part. 371

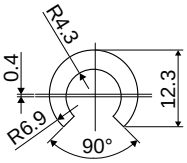

Code
371 / 83727

MATERIALS: Extruded HMWPE white colour.
BOX QUANTITY: This item is sold in Mt. - Min. 50 Mt.
FEATURES: To be used with 10 mm diameter rods.
ON REQUEST:
- **Guide rails:** Different colours and lengths.

Extruded product guide rails in 6 Mt. lengths Part. 372

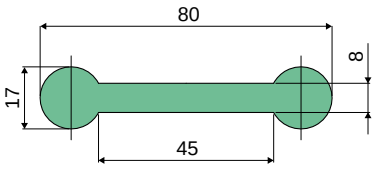

Code
372 / 83728

MATERIALS: Extruded HMWPE green colour.
BOX QUANTITY: This item is sold in Mt. - Min. 12 Mt. (2 lengths).
ON REQUEST:
- **Guide rails:** Different colours and lengths.

Chain guides and accessories

Part. 361 Extruded profile supplied in coils of 50 / 60 Mt. For plates from 2 to 4 mm.

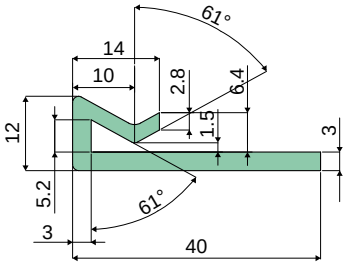

Code
361 / 83717

MATERIALS: Extruded UHMWPE green colour.
BOX QUANTITY: This item is sold in Mt. - Min. 50 Mt.
ON REQUEST:
- **Guide profiles:** Different colours and lengths.

Part. 362 Extruded profile supplied in coils of 50 / 60 Mt. For plates from 2 to 4 mm.

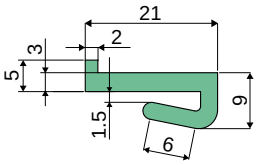

Code
362 / 83718

MATERIALS: Extruded UHMWPE green colour.
BOX QUANTITY: This item is sold in Mt. - Min. 50 Mt.
ON REQUEST:
- **Guide profiles:** Different colours and lengths.

Part. 363 Extruded profile supplied in coils of 50 / 60 Mt. For plates from 2 to 4 mm.

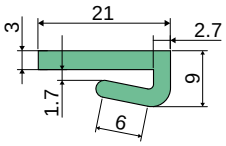

Code
363 / 83719

MATERIALS: Extruded UHMWPE green colour.
BOX QUANTITY: This item is sold in Mt. - Min. 50 Mt.
ON REQUEST:
- **Guide profiles:** Different colours and lengths.

Part. 364 Extruded chain guide profiles for flat 30x3 mm. supplied in 3 Mt. lengths

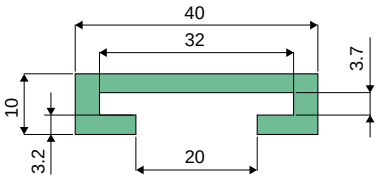

Code
364 / 83720

MATERIALS: Extruded UHMWPE green colour.
BOX QUANTITY: This item is sold in Mt. - Min. 6 Mt. (2 lengths).
ON REQUEST:
- **Guide profiles:** Different colours and lengths.

Chain guides and accessories

Extruded chain guide profiles for flat 40x6 mm. supplied in 6 Mt. lengths

Part. **365**

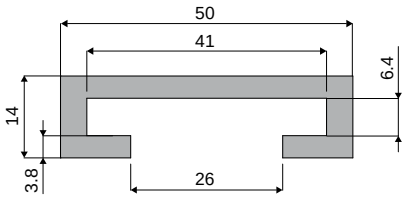

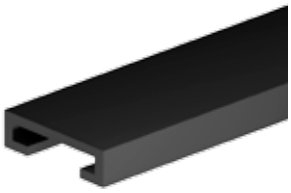

Code
365 / 83721

MATERIALS: Extruded UHMWPE black colour.
BOX QUANTITY: This item is sold in Mt. - Min. 12 Mt. (2 lengths).
ON REQUEST:
- **Guide profiles:** Different colours and lengths.

Extruded chain guide profiles for flat 50x6 mm. supplied in 6 Mt. lengths

Part. **366**

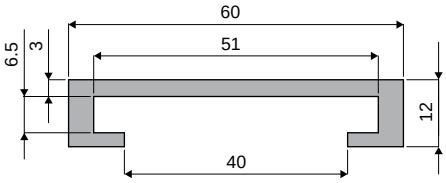

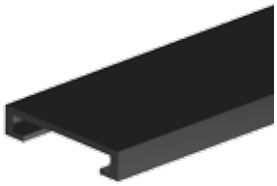

Code
366 / 83722

MATERIALS: Extruded UHMWPE black colour.
BOX QUANTITY: This item is sold in Mt. - Min. 12 Mt. (2 lengths).
ON REQUEST:
- **Guide profiles:** Different colours and lengths.

Extruded chain guide profiles supplied in coils of 50 / 60 Mt.

Part. **367**

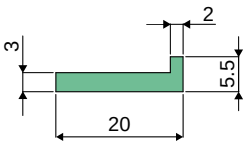

Code
367 / 83723

MATERIALS: Extruded UHMWPE green colour.
BOX QUANTITY: This item is sold in Mt. - Min. 50 Mt.
ON REQUEST:
- **Guide profiles:** Different colours and lengths.

Extruded chain guide profiles supplied in coils of 50 Mt.

Part. **368**

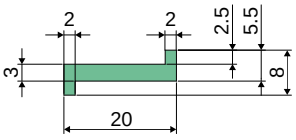

Code
368 / 83724

MATERIALS: Extruded UHMWPE green colour.
BOX QUANTITY: This item is sold in Mt. - Min. 50 Mt.
ON REQUEST:
- **Guide profiles:** Different colours and lengths.

Extruded chain guide profiles supplied in coils of 50 Mt. For plates from 6 to 7 mm.

Part. **369**

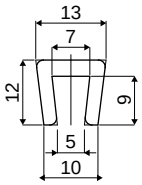

Code
369 / 83725

MATERIALS: Extruded UHMWPE white colour.
BOX QUANTITY: This item is sold in Mt. - Min. 50 Mt.
ON REQUEST:
- **Guide profiles:** Different colours and lengths.

TECOM S.r.l.
Via A.M. Ampére, 43 - 42017 Novellara (RE) - Italy
Tel.: (+39) 0522-651203 Fax.: (+39) 0522-756251
Web: http://www.tecomsrl.it e-mail: info@tecomsrl.it